MOTOLOGY

CYCLOIDAL

SPEED REDUCER

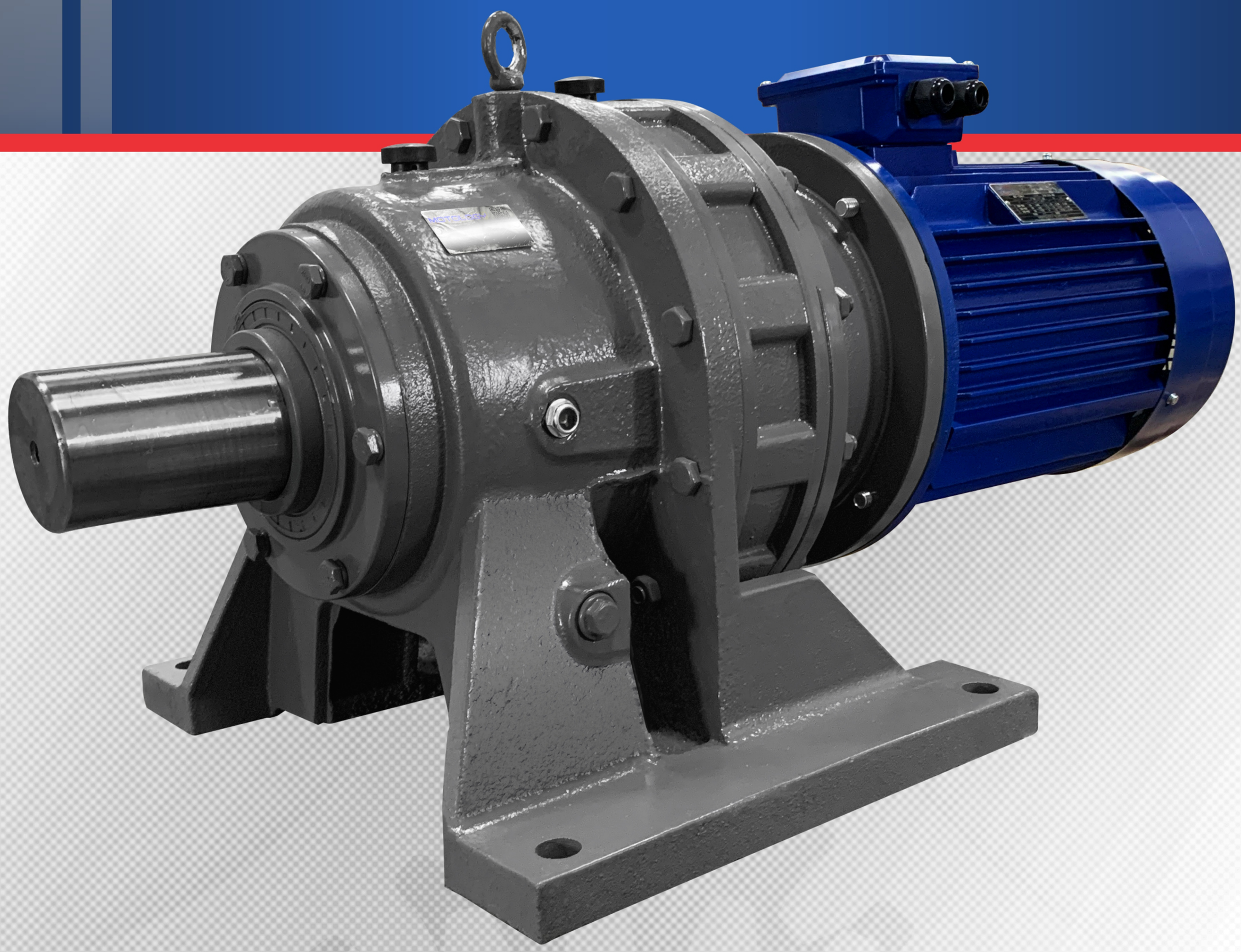

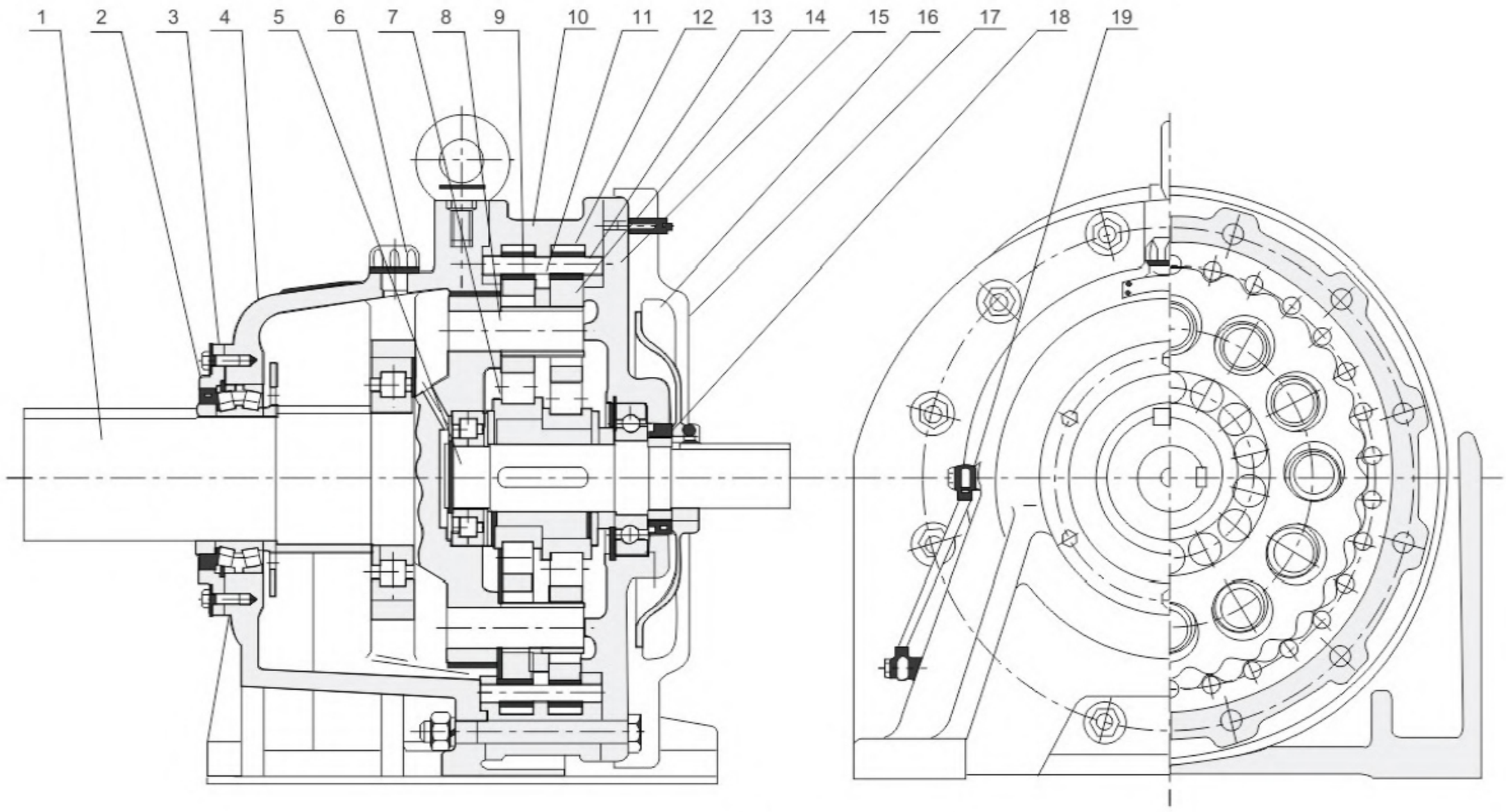

Figure 1.

Figure 1. Structural diagram of single stage decelerator horizontal double-axis type

1.Output shaft
2.Fastening ring
3.Gland bush
4.Horizontal seat
5.Input shaft
6.Abat vent
7.Eccentric sleeve
8.Pin shaft
9.Pin bush
10.Pin tooth shell
11.Spacer ring
12.Pin tooth sleeve
13.Pin tooth key
14.Cycloidal wheel
15.End cap
16.Fan blade
17.Fan cover
18.Input shaft fastening ring
19.Oil indicator

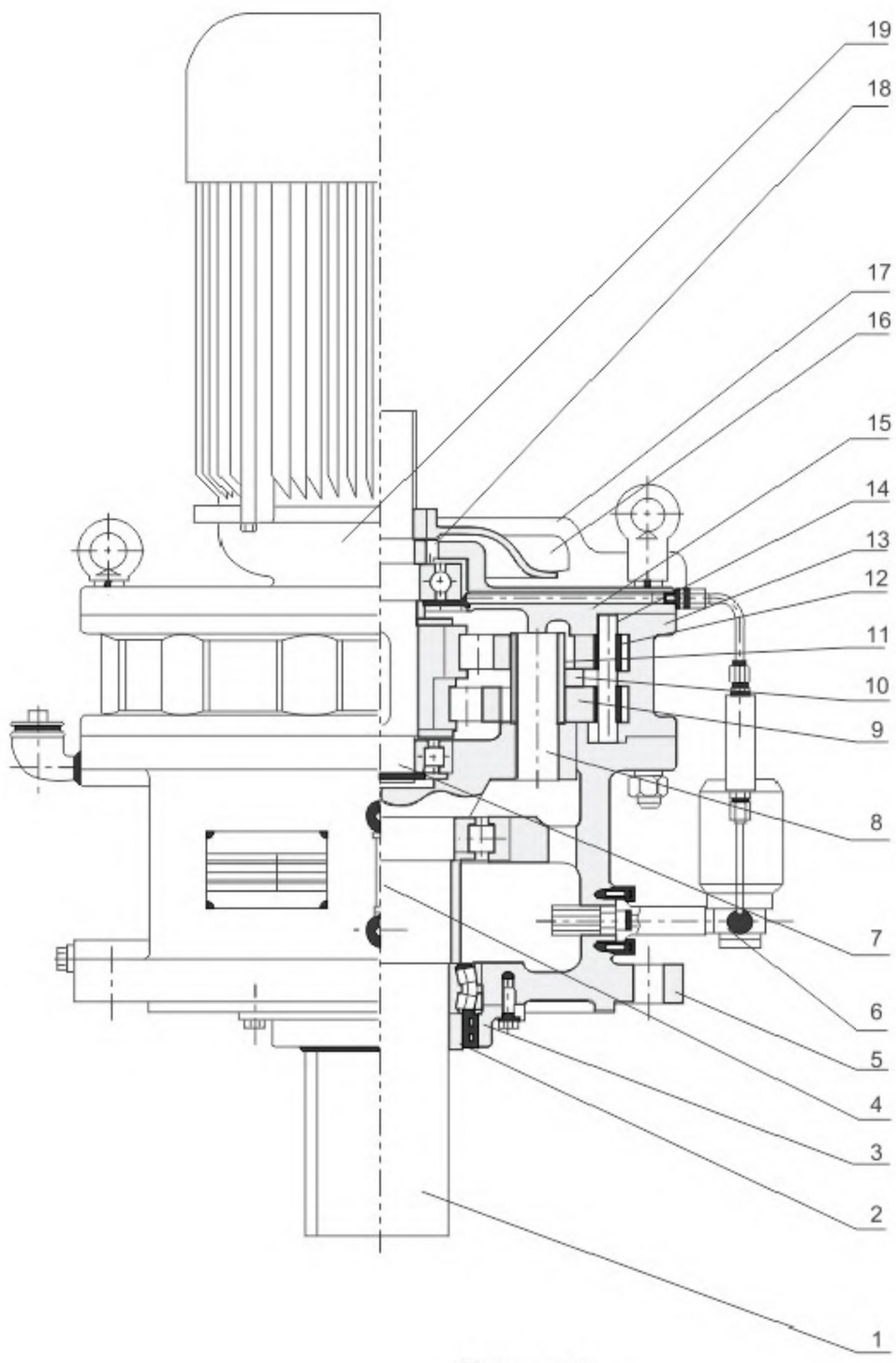

Figure 2

Figure 2 Structural diagram of single stage decelerator vertical direct coupling type double-axis

1.Output shaft
2.Fastening ring
3.Gland bush
4.Oil indicator
5.Vertical seat
6.Oil pump
7.Input shaft
8.Pin shaft
9.Cycloidal wheel
10.Spacer ring
11.Pin bush
12.Pin tooth sleeve
13.Pin tooth shell
14.Pin tooth key
15.End cap
16.Fan blade
17.Fan cover
18.Input fastening ring
19.Direct coupling motor

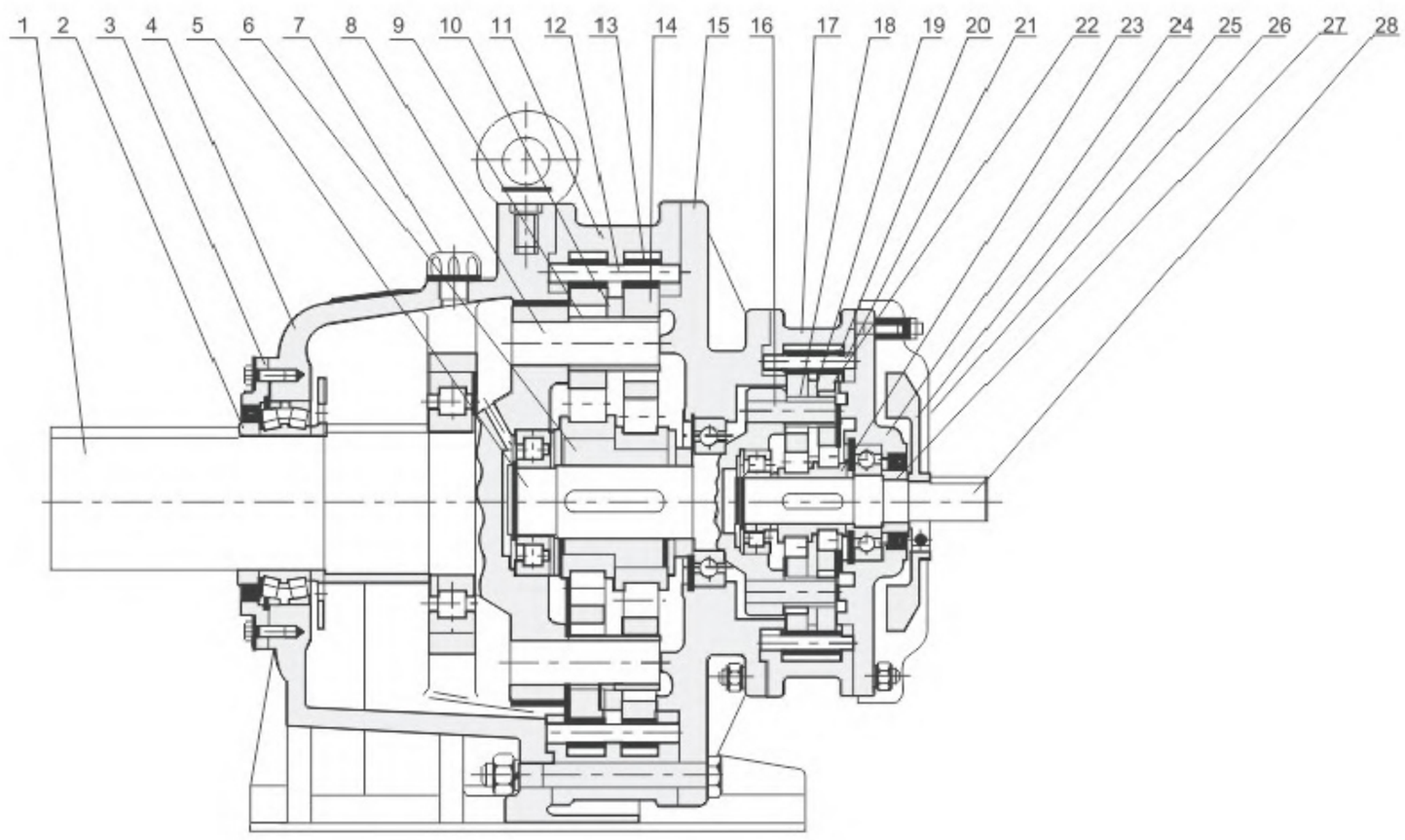

Figure 3

Figure 3 Structural diagram of double-stage decelerator horizontal double-axis type

1.Output shaft
2.Fastening ring
3.Gland bush
4.Horizontal seat
5.Intermediate shaft
6.Eccentric sleeve
7.Abat vent
8.Pin shaft
9.Pin bush
10.Spacer ring
11.Pin tooth shell
12.Pin tooth key
13.Pin tooth sleeve
14.Cycloidal wheel
15.Intermediate flange
16.Pin shaft
17.Pintooth shell
18.Pin bush
19.Spacer ring
20.Pin tooth sleeve
21.Pin tooth key
22.Cycloidal wheel
23.Tumbler shaft
24.End cap
25.Fan blade
26.Fan cover
27.Input shaft fastening ring
28.Input shaft

Specification and type:

AX W D 18.5-/6 8195 17

- 17 — Ratio is 17
- 8195 — Type 8195
- 18.5-/6 — Power 18.5Kw/6P motor
- D — Motor is direct coupling, connect with motor
- W — Horizontal(footing mounting)
- AX — Ax8000 series cycloidal

AX L E Y P 0.37 8165/09 17

- 17 — Ratio is 17
- 8165/09 — Type combination 8165/09
- 0.37 — Power of motor 0.37Kw/4P
- P — Y series is normal brake motor
- Y — Motor is with flange
- E — Double stage reducer
- L — Vertical flange motor
- AX — Ax8000 series cycloidal

Structure installation forms

Stander installation forms	Special structure installation forms			
W-Mounting W-footing&horizontal mounting	C-Mounting C-footing type install on left	U-Mounting U-footing type install on right	S-Mounting S-footing type spindle upward	X-Mounting X-footing type spindle downward
				
L-Mounting L-flange&vertical install	Y-Mounting Y-footing backstoke install	D-Mounting D-flange converse install	P-Mounting P-flange&horizontal install	Note
				

Power supply type

D	AX series stands for direct tpe dedicated motor			A	YA series increased safety motor		
Y	AX series stands for flange type normal motor			B	YB series explosion proof motor		
P	YEJ series planner brake motor	T	YCJ series electromagnetic speed motor	M	Hydraulic motor	S	Quiet motor
N	Inner cone brake motor	V	Frequency conversion and speed motor	Z	DC speed control motor		

Lubrication

1. Lubricating grease: in table 8~11. machines model maybe use indirect. Oil has been installed before out of factory. After running for two weeks, must change lubriceating gease oil must be replaced every 1-2 months, recommend months

2. Lubrication oil: grease can be used for lubrication and if equipped with oil pump for lubrication by oil circulati on gear oil pump for lubrication by oil circulation. gear oil pump is in direct coupling with 3-phase special purpose asynchronous motor. start up oil pump micro motor before running the machine and check if there is oil supply, otherwise reconnect micro motor by change of phase because oil pump must rotate in the specified direction afer oil pump woris correctly, oil level must be located at the specified position bu oil indicator oil pump filer must be mounted firmly and cleaned periodically to prevent blockchange that would affect lubrication.

3. Method to refilling and replace oil: after running for 2 weeks since the first oil filling for startup oil must be replaced with fresh oil and oil soil must be rinses away. afterwards oil must be replaced every 3~6months and the length of intervald may be shortende properly if ambient temperature is high or much damp. during the operation reserve in the decelerator must be kept at the specified oil level without overmuch or shortage

Lubricating Method & Lubricant

LUBRICATING OIL		
Ambient temperature	recommended gear oil for industrial extreme pressure	
	homemade	ISO
-10~5	L-CKC68	EP68
0~35	L-CKC100 L-CKC150	EP100 EP150
30~50	L-CKC220 L-CKC320 L-CKC460	EP220 EP320 EP460

The standard lubrication means

single-state speed reducer	Type	8065	8075	8085	8095	8105	8115	8125	8135	8145	8155	8165	8175	8185	8195	8205	8215	8225	8235	8245	8255	8265	8275
	Horizontal Type	oil(maintenance-free)							bath lubrication														
	Vertical Type	oil(maintenance-free)							bath lubrication			forced lubrication											
Double-state speed reducer	Type	8065/06 8085/06 8095/07	8115/07 8115/09	8135/09 8135/10	8145/10	8165/10	8175/10	8185/10	8165/11	8175/11	8185/11 8185/13	8195/13	8205/13	8215/16	8225/13 8225/17	8235/16 8235/18	8245/16 8245/18	8255/17 8255/19	8265/19	8275/19			
	Horizontal Type	oil(maintenance -free)		oil (replenish)					bath lubrication														
	Vertical Type	oil(maintenance -free)		oil (replenish)					forced lubrication														

Model seletion chart for single stage direct coupling type (equipped with 4-pole motor)

Tranmission ratio	Hz Motor frequency	r/min Output rotating speed	Motor r/min Input rotating speed	Motor Quantity of pole
9	50	166	1500	4

Power kw	Output torque N.m	Service factor K	Type
1.1	58.3	2.50	8105
1.5	79.6	1.83	8105
2.2	117	1.25	8105
		2.30	8115
3.0	159	1.69	8115
		2.45	8135
4.0	212	1.27	8115
		1.84	8135
5.5	292	1.34	8135
		1.8	8145
7.5	398	1.32	8135
		1.35	8145
		1.75	8155
11	584	1.20	8155
		1.64	8165
15	796	1.20	8165
		1.67	8175
18.5	982	1.35	8175
22	1167	1.25	8185

Tranmission ratio	Hz Motor frequency	r/min Output rotating speed	Motor r/min Input rotating speed	Motor Quantity of pole
11	50	136	1500	4

Power kw	Output torque N.m	Service factor K	Type
0.09	5.7	2.78	8075
0.18	11.4	1.38	8075
		2.22	8085
0.37	23.4	1.08	8085
		3.32	8095
0.55	35.7	2.23	8095
0.75	48.7	1.64	8095
1.1	71.3	2.50	8105
1.5	97.3	1.83	8105
2.2	143	1.25	8105
		2.30	8115
3.0	195	1.69	8115
		2.45	8135
4.0	253	1.27	8115
		1.84	8135
5.5	357	1.34	8135
		1.80	8145
7.5	486	1.32	8135
		1.35	8145
		1.75	8155
11	714	1.45	8165
		1.64	8175
15	973	1.20	8165
		1.67	8175
18.5	1196	1.35	8175
		1.82	8185
22	1432	1.25	8175
		1.53	8185
		1.66	8195
30	1942	1.12	8185
		1.47	8195
		1.97	8205
37	2403	1.19	8195
		1.59	8205
		1.95	8215
45	2922	1.31	8205
		1.60	8215
55	3569	1.31	8215
		1.77	8225
75	4864	1.30	8225

Tranmission ratio	Hz Motor frequency	r/min Output rotating speed	Motor r/min Input rotating speed	Motor Quantity of pole
17	50	88	1500	4

Power kw	Output torque N.m	Service factor K	Type
0.09	8.7	2.77	8075
0.18	17.6	1.38	8075
		2.22	8085
0.37	36.2	1.08	8085
		2.94	8095
0.55	55.1	1.98	8095
0.75	75.2	1.46	8095
		2.84	8105
1.1	110	1.94	8105
1.5	150	1.42	8105
		3.18	8115
2.2	221	2.17	8115
3.0	301	1.59	8115
		1.70	8125
		2.02	8135
4.0	390	1.19	8115
		1.27	8125
		1.51	8135
5.5	551	1.10	8135
		1.30	8135
		1.69	8145
7.5	752	1.24	8145
		1.47	8165
		2.04	8175
11	1098	1.39	8165
		1.79	8175
15	1500	1.02	8165
		1.31	8175
		1.63	8185
18.5	1853	1.06	8175
		1.32	8180
		1.65	8185
22	2206	1.11	8180
		1.38	8185
		1.66	8195
30	3010	1.02	8185
		1.22	8195
37	3707	1.19	8195

Model seletion chart for single stage direct coupling type (equipped with 4-pole motor)

Tranmission ratio	Hz Motor frequency	r/min Output rotating speed	Motor r/min Input rotating speed	Motor Quantity of pole
21	50	71	1500	4

Power kw	Output torque N.m	Service factor K	Type
0.09	11.0	1.82	8075
0.18	21.8	1.78	8085
0.37	44.8	2.13	8095
0.55	68.1	1.42	8095
0.75	92.9	1.05	8095
		2.16	8105
1.1	136	1.46	8105
1.5	185	1.08	8105
		2.20	8115
2.2	273	1.50	8115
3.0	371	1.10	8115
		1.63	8135
4.0	484	1.22	8135
5.5	681	1.00	8145
		1.60	8160
7.5	929	1.18	8160
		1.43	8165
11	1363	1.09	8170
		1.36	8175
15	1853	1.00	8175
		1.18	8180
		1.46	8185
18.5	2295	1.19	8185
		1.30	8190
22	2726	1.00	8185
		1.09	8190
		1.35	8195
30	3717	1	8195
		1.26	8205
		1.62	8215
37	4579	1.02	8215
		1.30	8225
45	5570	1.07	8215
		1.28	8225

Tranmission ratio	Hz Motor frequency	r/min Output rotating speed	Motor r/min Input rotating speed	Motor Quantity of pole
23	50	65	1500	4

Power kw	Output torque N.m	Service factor K	Type
0.75	102	1.93	8105
1.1	149	1.32	8105
1.5	203	2.17	8115
2.2	298	1.48	8115
		1.56	8125
		1.85	8135
3.0	407	1.72	8135
		1.99	8145
4.0	542	1.28	8135
		1.49	8145
5.5	746	1.25	8155
		1.61	8165
7.5	1017	1.57	8165
		1.72	8175
11	1492	1.43	8175
		1.68	8185
15	2034	1.05	8175
		1.55	8185
		2.00	8195
18.5	2509	1.25	8185
		1.62	8195
22	2983	1.06	8185
		1.59	8195
30	4068	1.00	8190

Tranmission ratio	Hz Motor frequency	r/min Output rotating speed	Motor r/min Input rotating speed	Motor Quantity of pole
29	50	52	1500	4

Power kw	Output torque N.m	Service factor K	Type
0.09	14.9	1.55	8075
		2.77	8085
0.18	29.7	1.38	8085
		3.77	8095
0.37	61.2	1.83	8095
0.55	94.0	2.51	8105
0.75	129	1.83	8105
1.1	188	2.64	8115
1.5	257	1.93	8115
2.2	377	1.32	8115
		2.03	8135
3.0	513	1.49	8135
4.0	633	1.10	8135
		1.48	8155
5.5	941	1.08	8155
		1.79	8165
7.5	1285	1.32	8165
		1.93	8175
11	1883	1.32	8175
		1.70	8185
15	2569	1.25	8185
		2.04	8195
18.5	3167	1.01	8185
		1.66	8195
22	3766	1.39	8195
		1.80	8205
30	5129	1.32	8205
		1.63	8215
37	6324	1.32	8215
		1.58	8225
45	7698	1.30	8225
55	9404	1.06	8225

Model seletion chart for single stage direct coupling type (equipped with 4-pole motor)

Tranmission ratio	Hz Motor frequency	r/min Output rotating speed	Motor r/min Input rotating speed	Motor Quantity of pole
35	50	43	1500	**4**

Power kw	Output torque N.m	Service factor K	Type
0.09	15.5	1.37	8075
		2.74	8085
0.18	31.0	1.37	8085
		2.79	8095
0.37	74.0	1.35	8095
		2.53	8105
0.55	113	1.89	8105
0.75	115	1.38	8105
		3.29	8115
1.1	227	2.25	8115
1.5	310	1.65	8115
2.2	454	1.34	8135
		1.68	8145
3.0	600	1.23	8145
4.0	800	1.24	8155
		2.19	8165
5.5	1140	1.30	8165
		1.75	8175
7.5	1549	1.17	8165
		1.68	8175
11	2265	1.15	8175
		1.70	8185
15	3099	1.25	8185
		1.62	8195
18.5	3815	1.01	8185
		1.31	8195
22	4540	1.10	8195

Tranmission ratio	Hz Motor frequency	r/min Output rotating speed	Motor r/min Input rotating speed	Motor Quantity of pole
43	50	35	1500	4

Power kw	Output torque N.m	Service factor K	Type
0.09	22.1	1.12	8075
		2.23	8085
0.18	44.2	1.11	8085
		2.79	8095
0.37	90.9	1.35	8095
		2.53	8105
0.55	139	1.71	8105
0.75	190	1.25	8105
		2.62	8115
1.1	279	1.78	8115
1.5	381	1.31	8115
		1.99	8135
2.2	558	1.36	8135
		1.79	8155
3.0	737	1.31	8155
4.0	981	1.70	8165
5.5	1390	1.24	8165
		1.70	8175
7.5	1902	1.25	8175
		2.00	8185
11	2785	1.37	8185
		1.68	8195
15	3805	1.40	8195
		1.83	8205
18.5	4687	1.49	8205
		2.03	8215
22	5580	1.25	8205
		1.70	8215
30	7610	1.25	8215
		1.54	8225
37	9384	1.01	8215
		1.25	8225
45	11408	1.03	8225

Tranmission ratio	Hz Motor frequency	r/min Output rotating speed	Motor r/min Input rotating speed	Motor Quantity of pole
59	50	25	1500	4

Power kw	Output torque N.m	Service factor K	Type
0.09	31.9	1.33	8085
		3.68	8095
0.18	61.9	1.84	8095
0.37	127	1.65	8105
		3.78	8115
0.55	191	2.55	8115
0.75	261	1.87	8115
1.1	383	1.59	8135
1.5	522	1.45	8135
		1.92	8145
2.2	765	1.31	8145
		1.35	8155
		1.68	8165
3.0	1033	1.23	8165
4.0	1373	1.24	8165
		1.79	8175
5.5	1912	1.30	8175
		1.70	8185
7.5	2609	1.25	8185
		2.03	8195
11	3824	1.38	8195
		1.75	8205
15	5217	1.02	8195
		1.28	8205
		1.87	8215
18.5	6433	1.04	8205
		1.52	8215
		1.82	8225
22	7649	1.27	8215
		1.53	8225
30	10394	1.12	8225

Model seletion chart for single stage direct coupling type (equipped with 4-pole motor)

Tranmission ratio	Hz Motor frequency	r/min Output rotating speed	Motor r/min Input rotating speed	Motor Quantity of pole
71	50	21	1500	4

Power kw	Output torque N.m	Service factor K	Type
0.09	36.9	2.90	8095
0.18	73.7	1.45	8095
		2.77	8105
0.37	152	1.35	8105
		2.65	8115
0.55	230	1.79	8115
0.75	314	1.31	8115
		1.38	8125
1.1	460	1.66	8135
1.5	628	1.22	8135
		1.42	8145
		1.57	8155
		2.16	8165
2.2	921	1.07	8155
		1.88	8165
3.0	1256	1.38	8165
4.0	1638	1.03	8165
		1.51	8175
5.5	2304	1.54	8185
		2.00	8195
7.5	3138	1.13	8185
		1.80	8195
11	4609	1.23	8195

Tranmission ratio	Hz Motor frequency	r/min Output rotating speed	Motor r/min Input rotating speed	Motor Quantity of pole
87	50	35	1500	4

Power kw	Output torque N.m	Service factor K	Type
0.09	40.5	2.75	8095
0.18	80.9	1.37	8095
		2.76	8105
0.37	167	1.34	8105
		2.53	8115
0.55	282	1.71	8115
0.75	385	1.25	8115
		1.97	8135
1.1	564	1.35	8135
1.5	770	1.32	8145
		1.70	8165
2.2	1130	1.35	8165
3.0	1539	1.62	8175
4.0	1804	1.2	8175
		1.85	8185
5.5	2824	1.35	8185
		1.63	8195
7.5	3844	1.57	8195
		1.83	8205
11	5638	1.07	8195
		1.25	8205
		1.67	8215
15	7698	1.22	8215
		1.54	8225
18.5	9492	1.25	8225
22	11277	1.05	8225

Model Selection Table

(8000) Series Cycloidal Reducers

Model seletion chart for single stage direct coupling type (equipped with 6-pole motor)

Tranmission ratio	Hz Motor frequency	r/min Output rotating speed	Motor r/min Input rotating speed	Motor Quantity of pole
11	50	91	1000	6

Power kw	Output torque N.m	Service factor K	Type
18.5	1790	1.60	8185
		1.91	8195
22	2130	1.35	8185
		1.61	8195
30	2910	1.18	8195
		1.59	8205
37	3590	1.29	8205
		1.67	8215
45	4370	1.38	8215
		1.80	8225
55	5350	1.48	8225
		1.70	8235
75	7290	1.25	8235
		1.58	8245
		1.92	8255
90	8750	1.04	8235
		1.32	8245
		1.60	8255
110	10600	1.08	8245
		1.31	8255
		1.57	8265
132	12800	1.09	8255
		1.31	8265

Tranmission ratio	Hz Motor frequency	r/min Output rotating speed	Motor r/min Input rotating speed	Motor Quantity of pole
17	50	58	1000	6

Power kw	Output torque N.m	Service factor K	Type
18.5	2770	1.23	8185
		1.88	8195
22	3300	1.58	8195
		1.62	8205
30	4500	1.19	8205
		1.60	8215
37	5550	1.29	8215
		1.75	8225
45	6750	1.44	8225
		1.66	8235
55	8250	1.36	8235
		1.75	8245
75	11200	1.28	8245
		1.58	8255
		1.92	8265

Tranmission ratio	Hz Motor frequency	r/min Output rotating speed	Motor r/min Input rotating speed	Motor Quantity of pole
23	50	43	1000	6

Power kw	Output torque N.m	Service factor K	Type
18.5	3750	1.42	8195
		1.52	8205
		2.02	8215
22	4460	1.28	8205
		1.70	8215
		2.14	8225
30	6090	1.24	8215
		1.57	8225
		1.87	8235
37	7510	1.27	8225
		1.52	8235
		1.90	8245

Tranmission ratio	Hz Motor frequency	r/min Output rotating speed	Motor r/min Input rotating speed	Motor Quantity of pole
29	50	34	1000	6

Power kw	Output torque N.m	Service factor K	Type
18.5	4730	1.24	8195
		1.52	8205
		2.02	8215
22	5630	1.28	8205
		1.70	8215
		2.14	8225
30	7680	1.24	8215
		1.57	8225
		1.88	8235
37	9490	1.52	8235
		1.90	8245
45	11500	1.25	8235
		1.57	8245
		2.14	8255
55	14100	1.02	8235
		1.28	8245
		1.75	8255
75	19200	1.28	8255
		1.83	8265
90	23000	1.07	8255
		1.53	8265
		1.60	8275
110	28200	1.25	8265
132	33800	1.04	8265

Model seletion chart for single stage direct coupling type (equipped with 6-pole motor)

Tranmission ratio	Hz Motor frequency	r/min Output rotating speed	Motor r/min Input rotating speed	Motor Quantity of pole
35	50	28	1000	6

Power kw	Output torque N.m	Service factor K	Type
18.5	5710	1.13	8205
		1.51	8215
		1.84	8225
22	6800	1.27	8215
		1.55	8225
		1.97	8235
30	9270	1.14	8225
		1.44	8235
		1.88	8245
37	11400	1.17	8235
		1.52	8245
		1.85	8255
45	13900	1.25	8245
		1.52	8255
		2.14	8265

Tranmission ratio	Hz Motor frequency	r/min Output rotating speed	Motor r/min Input rotating speed	Motor Quantity of pole
43	50	23	1000	6

Power kw	Output torque N.m	Service factor K	Type
18.5	7020	1.13	8205
		1.51	8215
		1.84	8225
		2.34	8235
22	8360	1.97	8235
30	11400	1.45	8235
		1.88	8245
37	14000	1.17	8235
		1.53	8245
		1.86	8255
45	17100	1.26	8245
		1.53	8255
		2.14	8265
55	20900	1.03	8245
		1.25	8255
		1.75	8265
75	28500	1.28	8265
		1.70	8275
90	34200	1.07	8265
		1.41	8275

Tranmission ratio	Hz Motor frequency	r/min Output rotating speed	Motor r/min Input rotating speed	Motor Quantity of pole
59	50	17	1000	6

Power kw	Output torque N.m	Service factor K	Type
15	7810	1.38	8215
		1.66	8225
		2.02	8235
18.5	9640	1.12	8215
		1.34	8225
		1.64	8235
22	11400	1.38	8235
		1.78	8245
30	15600	1.01	8235
		1.31	8245
		1.88	8255
37	19300	1.06	8245
		1.52	8255
		2.04	8265
45	23400	1.25	8255
		1.68	8265
55	28700	1.02	8255
		1.38	8265
75	39100	1.01	8265
		1.36	8275

Tranmission ratio	Hz Motor frequency	r/min Output rotating speed	Motor r/min Input rotating speed	Motor Quantity of pole
71	50	14	1000	6

Power kw	Output torque N.m	Service factor K	Type
18.5	11600	1.13	8235
		1.44	8245
		1.85	8255
22	13700	1.21	8245
		1.56	8255
		2.08	8265

Tranmission ratio	Hz Motor frequency	r/min Output rotating speed	Motor r/min Input rotating speed	Motor Quantity of pole
87	50	11	1000	6

Power kw	Output torque N.m	Service factor K	Type
15	11500	1.40	8235
		1.78	8245
18.5	14200	1.14	8235
		1.45	8245
		1.86	8255
22	16900	1.22	8245
		1.56	8255
		2.09	8265
30	23000	1.15	8255
		1.53	8265
37	28400	1.24	8265
		1.39	8275
45	34600	1.02	8265

Dimension chart for AXLD 8065~8155 single connect direct horizontal cycloidal speed reducer

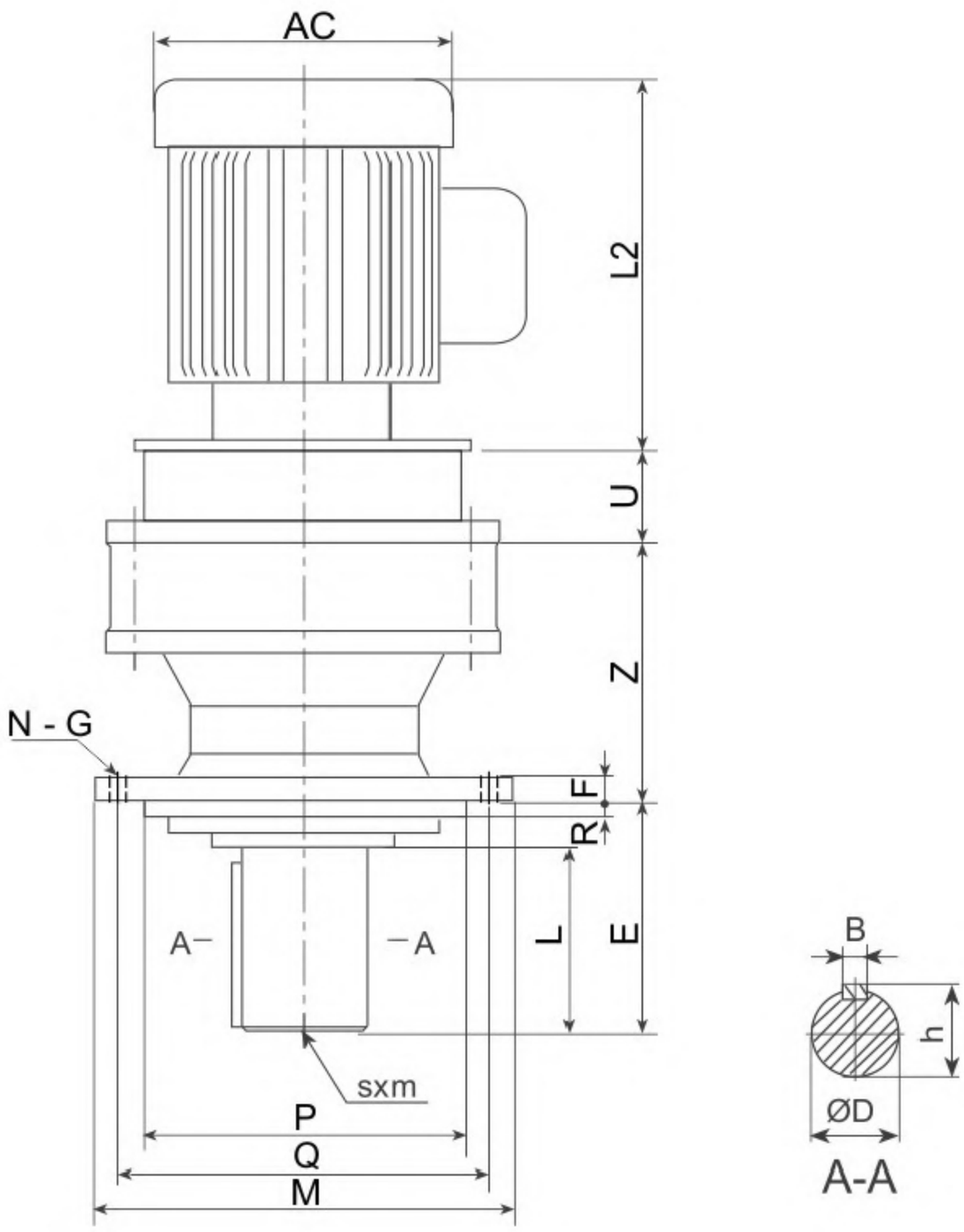

Dimension chart for AXLD 8165~8275 single connect direct horizontal cycloidal speed reducer

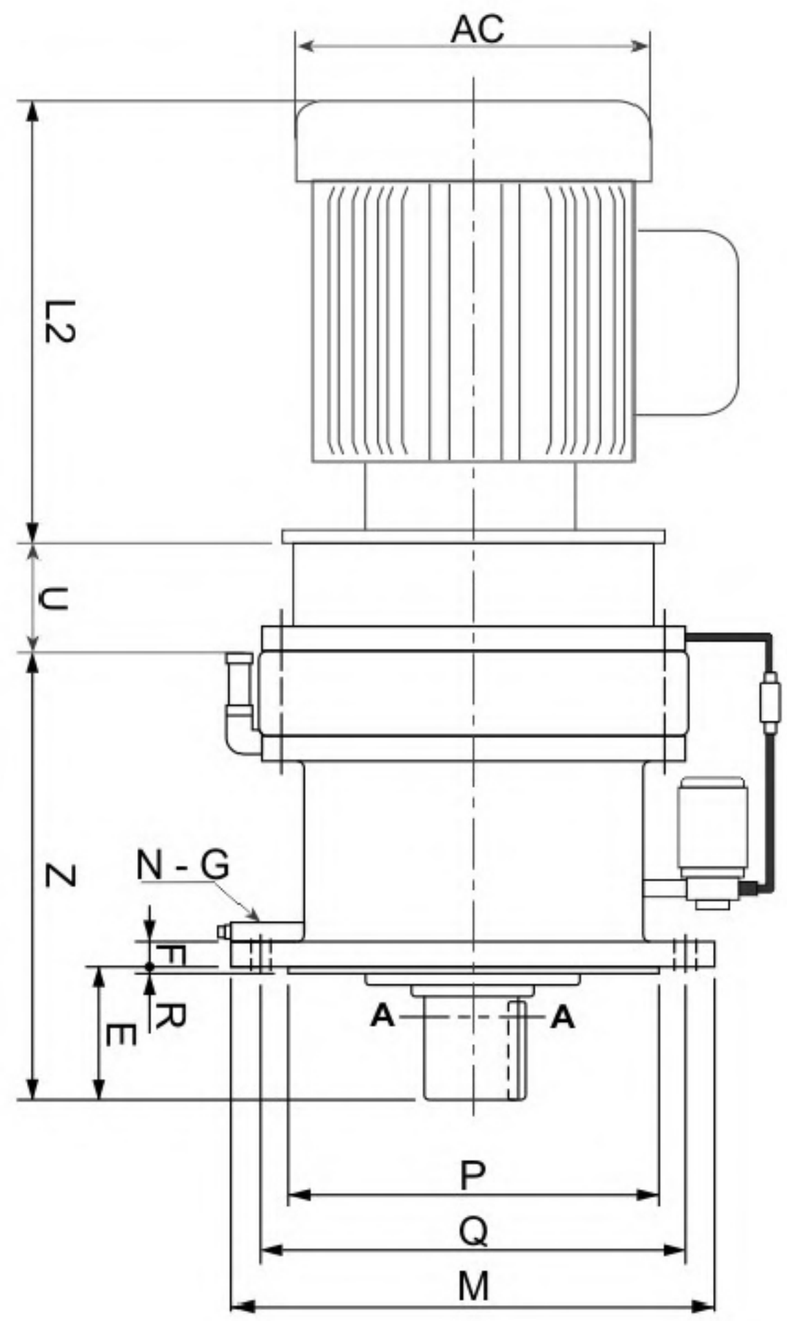

Size / Type	Z	E	F	R	M	Q	P	N-G	U	Output Terminal					
										D	L	B	t	h	sxm
8065	58	34	8	3	120	102	80	6-Φ9		14	25	5	11	16	–
8075	56	42	9	3	160	134	110	4-Φ11		18	30	6	14.5	20.5	–
8085	94	48	9	3	160	134	110	4-Φ11		18	35	6	14.5	20.5	–
8095	94	48	9	3	160	134	110	4-Φ11		28	35	8	24	31	–
8105	108	48	9	3	160	134	110	4-Φ11		28	35	8	24	31	–
8115	120	69	13	4	210	180	140	6-Φ11		38	55	10	33	41	–
8125	120	69	13	4	210	180	140	6-Φ11		38	55	10	33	41	–
8135	164	76	15	4	260	230	200	6-Φ11		50	61	14	44.5	53.5	M10×18
8145	164	96	15	4	260	230	200	6-Φ11		50	81	14	44.5	53.5	M10×18
8155	164	96	15	4	260	230	200	6-Φ11		50	81	14	44.5	53.5	M10×18

Size / Type	Z	E	F	R	M	Q	P	N-G	U	K	W	Output Terminal					
												D	L	B	t	h	sxm
8165	219	89	20	4	340	310	270	6-Φ11		217	200	60	80	18	53	64	M10×18
8175	258	94	22	5	400	360	316	8-Φ14		222	225	70	84	20	62.5	74.5	M12×24
8185	279	110	22	5	430	390	345	8-Φ18		237	240	80	100	22	71	85	M12×24
8195	320	145	30	6	490	450	400	12-Φ18		360	200	95	125	25	86	100	M20×34
8205	308	204	30	5	455	405	355	8-Φ22		376	287	100	165	28	90	106	M20×34
8215	328	203	35	7	490	440	390	8-Φ24		400	290	110	165	28	100	116	M20×34
8225	356	210	35	10	535	475	415	8-Φ27		400	326	120	165	32	109	127	M20×34
8235	380	250	40	10	570	510	450	8-Φ27		413	344	130	200	32	119	137	M24×41
8245	411	250	40	10	635	560	485	8-Φ33		420	365	140	200	36	128	148	M24×41
8255	493	295	45	10	685	610	535	8-Φ33		432	425	160	240	40	147	169	M30×49
8265	532	360	50	10	750	660	570	8-Φ39		460	431	170	30	40	157	179	M30×49
8275	796	355	60	10	1160	1020	900	8-Φ39		610	613	180	320	45	165	190	M42×80

Dimension chart for AXWD 8065~8155 single connect direct horizontal cycloidal speed reducer

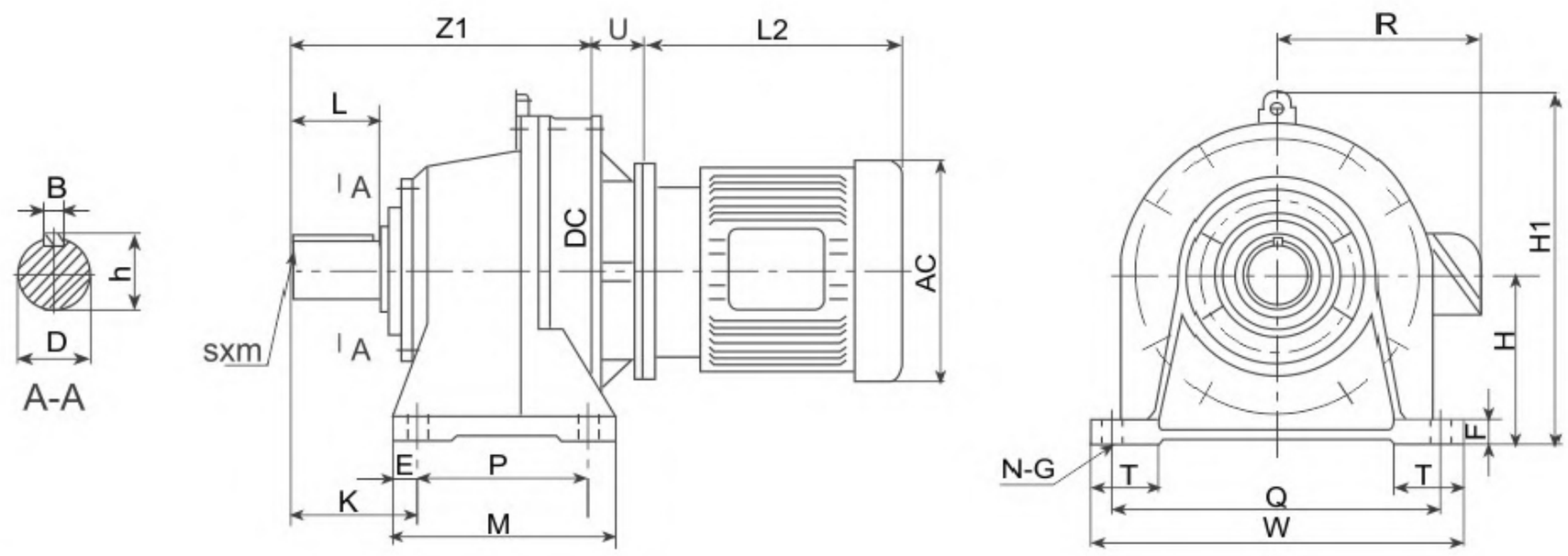

Size / Type	Z1	H	DC	P	Q	M	W	E	K	H1	F	T	N-G	U	Output Terminal					
															D	L	B	t	h	sxm
8065	92	80	110	60	120	88	148	42	14	138	10	35	4–Φ9		14	25	5	11	16	–
8075	98	80	110	60	120	88	148	47	14	138	10	35	4–Φ9		18	30	6	14.5	20.5	–
8085	129	90	134	75	120	101	148	52	14	157	13	35	4–Φ9		22	35	6	18.5	25	–
8095	142	100	150	90	150	135	180	60	15	207	15	40	4–Φ11		28	35	8	24	31	–
8105	156	100	150	90	150	135	180	60	15	207	15	40	4–Φ11		28	35	8	24	31	–
8115	186	120	204	115	190	155	230	82	20	257	15	55	4–Φ14		38	55	10	33	41	–
8125	186	140	204	115	190	155	230	82	20	277	15	60	4–Φ14		38	55	10	33	41	–
8135	240	150	230	145	290	195	330	100	25	300	22	65	4–Φ18		50	70	14	44.5	53.5	M10×18
8145	260	150	230	145	290	195	330	120	25	300	22	65	4–Φ18		50	90	14	44.5	53.5	M10×18
8155	260	160	230	145	290	195	330	120	25	310	22	70	4–Φ18		50	90	14	44.5	53.5	M10×18

Dimension chart for AXWD 8165~8275 single connect direct horizontal cycloidal speed reducer

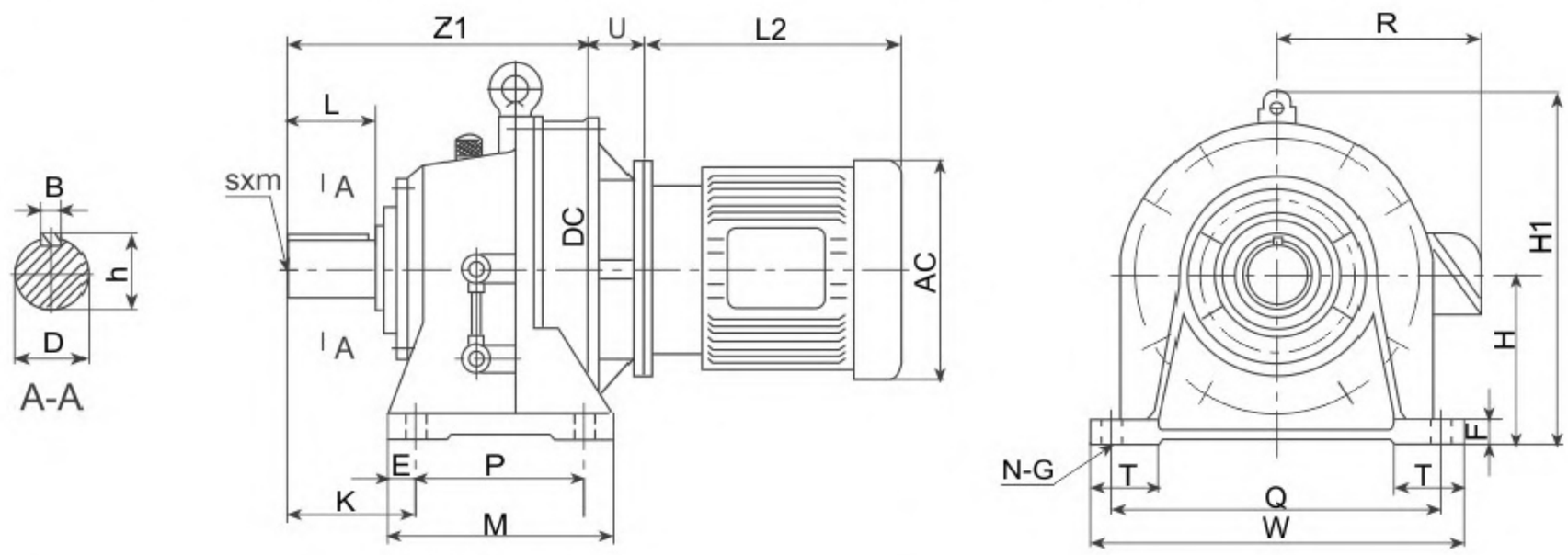

Size / Type	Z1	H	DC	P	Q	M	W	E	H1	F	T	N-G	U	Output Terminal					
														D	L	B	t	h	sxm
8165	308	160	300	150	370	238	410	139	356	25	75	4–Φ18		60	90	18	53	64	M10×18
8175	352	200	340	275	380	335	430	125	425	30	80	4–Φ22		70	90	20	62.5	74.5	M12×24
8185	389	220	370	320	420	380	470	145	460	30	85	4–Φ22		80	110	22	71	85	M12×24
8195	465	250	430	380	480	440	530	170	529	35	90	4–Φ26		95	135	25	86	100	M20×34
8205	512	250	448	360	440	440	530	215	530	35	100	4–Φ26		100	165	28	90	106	M20×34
8215	531	265	485	395	480	475	580	210	575	40	110	4–Φ26		110	165	28	100	116	M20×34
8225	566	280	526	420	540	520	620	230	610	40	115	4–Φ33		120	165	32	109	127	M20×34
8235	630	300	562	460	580	560	670	260	667	45	120	4–Φ33		130	200	32	119	137	M24×41
8245	661	335	614	480	630	580	720	263	729	45	128	4–Φ39		140	200	36	128	148	M24×41
8255	788	375	670	520	670	630	780	320	815	50	140	4–Φ39		160	240	40	147	169	M30×49
8265	892	400	736	590	770	700	880	390	874	55	160	4–Φ45		170	300	40	157	179	M30×49
8275	1151	540	986	420×2	1050	1040	1160	485	1161	60	200	6–Φ45		180	330	50	165	190	M42×80

Dimension chart for AXW 8065~8155 single & double shaft horizontal cycloidal speed reducer

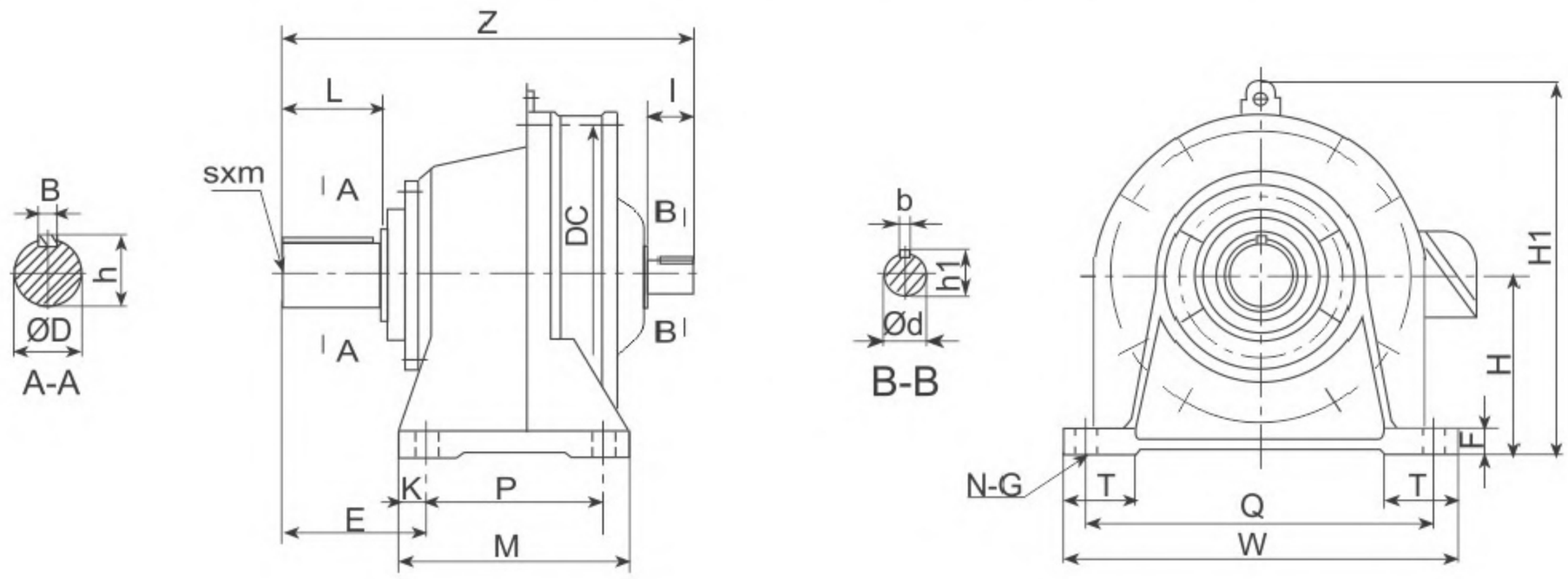

Size / Type	Z	H	DC	P	Q	M	W	E	K	H1	F	T	N-G	Input Terminal					Output Terminal						Weight kg
														d	l	b	t1	h1	D	L	B	t	h	sxm	
8065	145	80	110	60	120	88	148	42	14	138	10	35	4–Φ9	12	25	4	9.5	13.5	14	25	5	11	16	–	5
8075	151	80	110	60	120	88	148	47	14	138	10	35	4–Φ9	12	25	4	9.5	13.5	18	30	6	14.5	20.5	–	5
8085	179	90	134	75	120	101	148	52	14	157	13	35	4–Φ9	12	25	4	9.5	13.5	22	35	6	18.5	25	–	6
8095	202	100	150	90	150	135	180	60	15	207	15	40	4–Φ11	15	25	5	12	17	28	35	8	24	31	–	11
8105	208	100	150	90	150	135	180	60	15	207	15	40	4–Φ11	15	25	5	12	17	28	35	8	24	31	–	13
8115	259	120	204	115	190	155	230	82	20	257	15	55	4–Φ14	18	35	6	14.5	20.5	38	55	10	33	41	–	24
8125	259	140	204	115	190	155	230	82	20	277	15	60	4–Φ14	18	35	6	14.5	20.5	38	55	10	33	41	–	25
8135	321	150	230	145	290	195	330	100	25	300	22	65	4–Φ18	22	40	6	18.5	24.5	50	70	14	44.5	53.5	M10×18	43
8145	341	150	230	145	290	195	330	120	25	300	22	65	4–Φ18	22	40	6	18.5	24.5	50	90	14	44.5	53.5	M10×18	44
8155	341	160	230	145	290	195	330	120	25	310	22	70	4–Φ18	22	40	6	18.5	24.5	50	90	14	44.5	53.5	M10×18	46

Dimension chart for AXW 8165~8275 single & double shaft horizontal cycloidal speed reducer

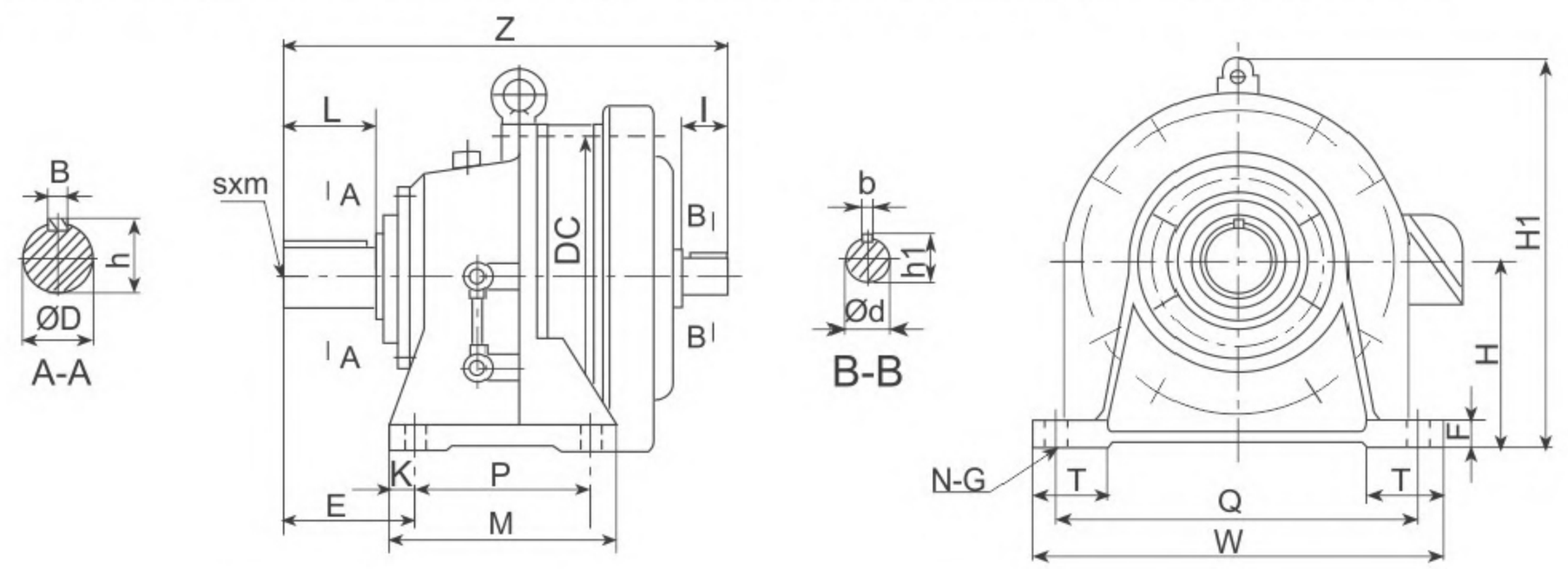

Size / Type	Z	H	DC	P	Q	M	W	E	H1	F	T	N-G	Input Terminal					Output Terminal						Weight kg
													d	l	b	t1	h1	D	L	B	t	h	sxm	
8165	413	160	318	150	370	238	410	139	356	25	75	4– Φ18	30	45	8	26	33	60	90	18	53	64	M10×18	84
8175	477	200	362	275	380	335	430	125	425	30	80	4– Φ22	35	55	10	30	38	70	90	20	62.5	74.5	M12×24	125
8185	527	220	390	320	420	380	470	145	460	30	85	4– Φ22	40	65	12	35	43	80	110	22	71	85	M12×24	163
8195	620	250	451	380	480	440	530	170	529	35	90	4– Φ26	45	70	14	39.5	48.5	95	135	25	86	100	M20×34	240
8205	678	250	471	360	440	440	530	215	530	35	100	4– Φ26	45	82	14	39.5	48.5	100	165	28	90	106	M20×34	255
8215	708	265	507	395	480	475	580	210	575	40	110	4– Φ26	50	82	14	44.5	53.5	110	165	28	100	116	M20×34	336
8225	752	280	549	420	540	520	620	230	610	40	115	4– Φ33	55	82	16	49	59	120	165	32	109	127	M20×34	409
8235	839	300	591	460	580	560	670	260	667	45	120	4– Φ33	60	105	18	53	64	130	200	32	119	137	M24×41	503
8245	877	335	637	480	630	580	720	263	729	45	128	4– Φ39	65	105	18	58	69	140	200	36	128	148	M24×41	614
8255	1040	375	703	520	670	630	780	320	815	50	140	4– Φ39	80	130	22	71	85	160	240	40	147	169	M30×49	957
8265	1150	400	772	510	776	766	880	390	874	55	160	4–Φ45	80	130	22	71	85	170	300	46	157	179	M30×49	1190
8275	1474	540	980	420×2	1050	1040	1160	485	1161	60	200	6–Φ45	90	150	25	81	95	180	330	45	165	190	M42×80	2460

Dimension chart for AXL 8065~8155 single & double direct horizontal cycloidal speed reducer

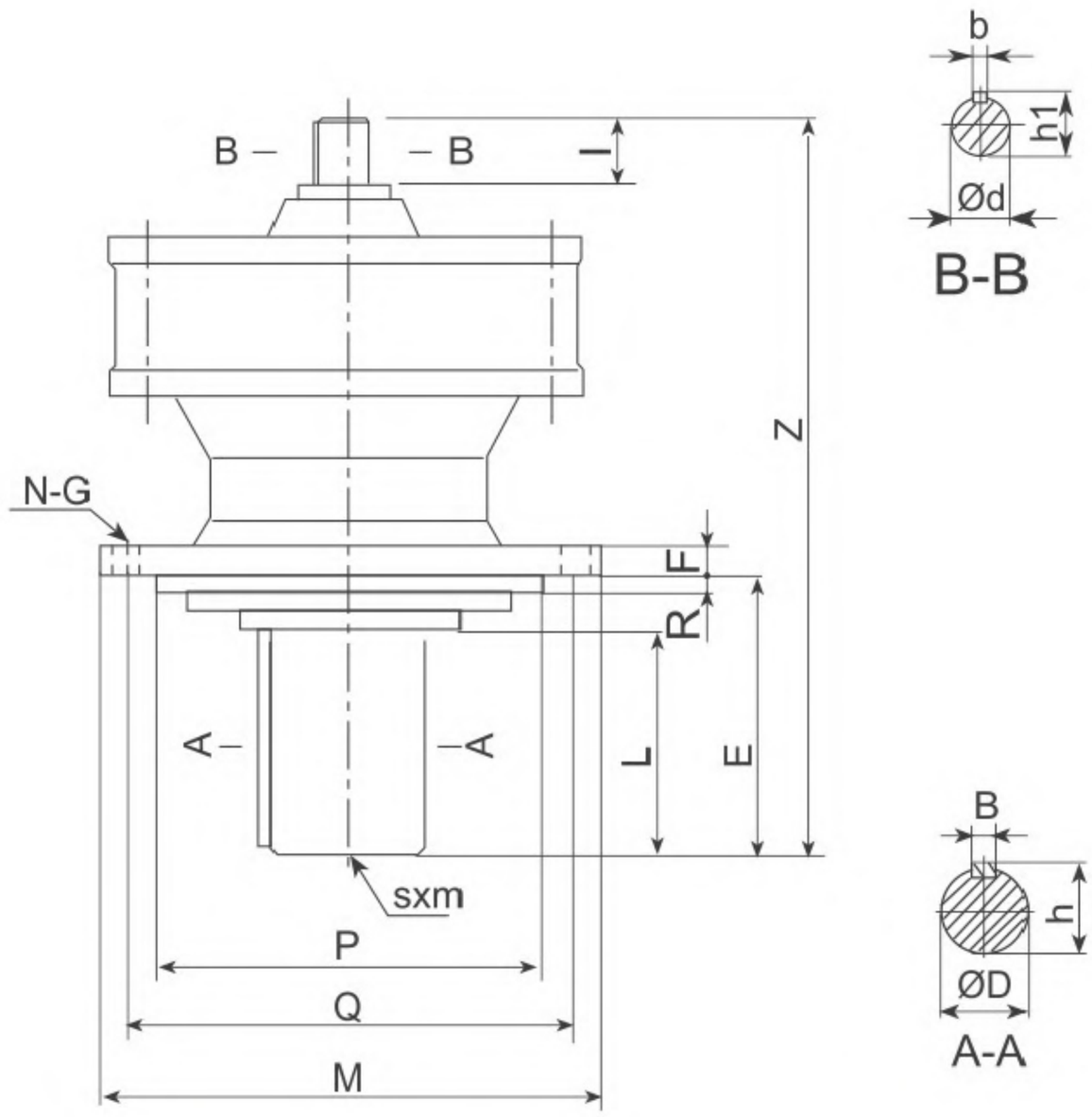

Dimension chart for AXL 8165~8275 single & double direct horizontal cycloidal speed reducer

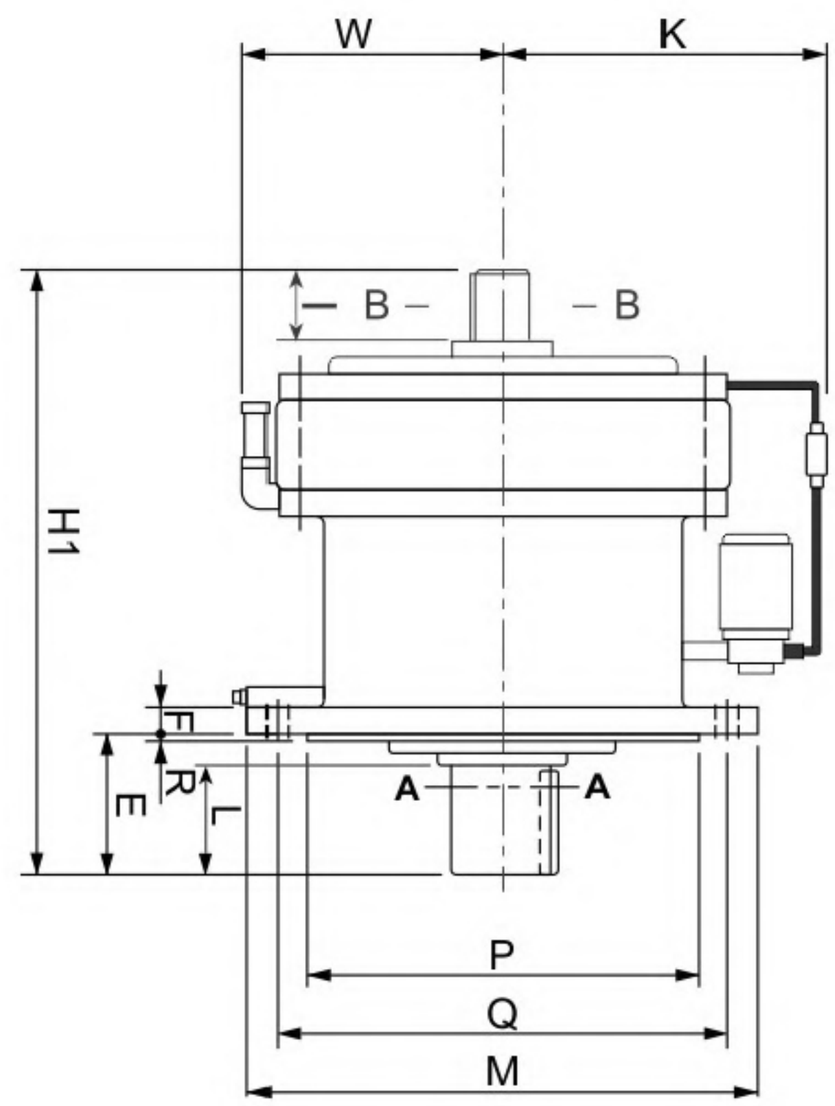

Size / Type	H1	R	F	E	N-G	M	Q	P	Input Terminal					Output Terminal						Weight kg
									d	l	b	t1	h1	D	L	B	t	h	sxm	
8065	145	3	8	34	6–Φ9	120	102	80	12	25	4	9.5	13.5	14	25	5	11	16	–	5
8075	151	3	9	42	4–Φ11	160	134	110	12	25	4	9.5	13.5	18	30	6	14.5	20.5	–	5
8085	179	3	9	48	4–Φ11	160	134	110	12	25	4	9.5	13.5	18	35	6	14.5	20.5	–	5
8095	202	3	9	48	4–Φ11	160	134	110	15	25	5	12	17	28	35	8	24	31	–	9
8105	208	3	9	48	6–Φ11	160	134	110	15	25	5	12	17	28	35	8	24	31	–	11
8115	259	4	13	69	6–Φ11	210	180	140	18	35	6	14.5	20.5	38	55	10	33	41	–	23
8125	259	4	13	69	6–Φ11	210	180	140	18	35	6	14.5	20.5	38	55	10	33	41	–	23
8135	321	4	15	76	6–Φ11	260	230	200	22	40	6	18.5	24.5	50	61	14	44.5	53.5	M10×18	42
8145	341	4	15	96	6–Φ11	260	230	200	22	40	6	18.5	24.5	50	81	14	44.5	53.5	M10×18	43
8155	341	4	15	96	6–Φ11	260	230	200	22	40	6	18.5	24.5	50	81	14	44.5	53.5	M10×18	43

Size / Type	H1	R	F	E	N-G	M	Q	P	K	W	Input Terminal					Output Terminal						Weight kg
											d	l	b	t1	h1	D	L	B	t	h	sxm	
8165	413	4	20	89	6–Φ11	340	310	270	217	200	30	45	8	26	33	60	80	18	53	64	M18×18	79
8175	477	5	22	94	8–Φ14	400	360	316	222	225	35	55	10	30	38	70	84	20	62.5	74.5	M12×24	121
8185	527	5	22	110	8–Φ18	430	390	345	237	240	40	65	12	35	43	80	100	22	71	85	M12×24	150
8195	620	6	30	145	12–Φ18	490	450	400	360	200	45	70	14	39.5	48.5	95	125	25	86	100	M20×34	225
8205	678	5	30	204	8–Φ22	455	405	355	376	287	45	82	14	39.5	48.5	100	165	28	90	106	M20×34	245
8215	708	7	35	203	8–Φ24	490	440	390	400	290	50	82	14	44.5	53.5	110	165	28	100	116	M20×34	320
8225	752	10	35	210	8–Φ27	535	475	415	400	326	55	82	16	49	59	120	165	32	109	127	M20×34	400
8235	839	10	40	250	8–Φ27	570	510	450	413	344	60	105	18	53	64	130	200	32	119	137	M24×41	480
8245	877	10	40	250	8–Φ33	635	560	485	420	365	65	105	18	58	69	140	200	36	128	148	M24×41	570
8255	1040	10	45	295	8–Φ33	685	610	535	432	425	80	130	22	71	85	160	240	40	147	169	M30×49	870
8265	1150	10	50	360	8–Φ39	750	660	570	460	431	80	130	22	71	85	170	300	40	157	179	M30×49	
8275	1474	10	60	355	8–Φ39	1160	1020	900	610	613	90	150	25	81	95	180	320	45	165	1900	M42×80	2500

Model selection for double model size combination type

Ratio	Frequency Hz	Motor Output Speed R/min	Electromotor	
			Motor Input Speed R/min	Pole
99 (11x9)	50	15	1500	4

Power kw	Output torque N.m	Service factor K	Type
1.1	608	*	8135/10
1.5	756	*	8135/10
2.2	765	*	8135/09
	1030	*	8145/10
	1180	1.23	8165/10
3.0	1520	*	8165/11
4.0	1810	*	8165/11
5.5	2860	*	8175/11
	2750	*	8175/11

Ratio	Frequency Hz	Motor Output Speed R/min	Electromotor	
			Motor Input Speed R/min	Pole
289 (17x17)	50	5.2	1500	4

Power kw	Output torque N.m	Service factor K	Type
0.09	25.5	*	8075/07
	51.0	*	8085/07
	128	*	8095/07
	141	1.66	8105/08
0.18	255	*	8105/08
	281	1.66	8115/08
0.37	510	*	8115/08
0.75	608	*	8135/09
	765	*	8135/09
	1030	*	8145/09
1.5	1810	*	8165/10
	2260	*	8175/10
2.2	2750	*	8175/11
	3240	*	8185/10
3.0	4070	*	8185/13
4.0	4070	*	8185/13
	5690	*	8195/13
5.5	7260	*	8195/13
7.5	8490	*	8215/13
11	11300	*	8225/17
	14200	*	8235/16
15	18100	*	8245/18
18.5	23500	*	8255/17
22	30400	*	8265/17

Ratio	Frequency Hz	Motor Output Speed R/min	Electromotor	
			Motor Input Speed R/min	Pole
121 (11x11)	50	12	1500	4

Power kw	Output torque N.m	Service factor K	Type
0.09	25.5	*	8075/07
	46.0	*	8085/07
	59.0	1.77	8095/08
0.18	106	*	8095/08
	118	1.72	8105/08
0.37	206	*	8105/08
	242	1.08	8115/08
0.55	333	1.38	8115/09
0.75	491	1.01	8115/09
1.1	608	*	8130/10
1.5	765	*	8135/10
	951	*	8145/10
2.2	951	*	8145/10
	1440	1.05	8165/11
3.0	1520	*	8165/11
4.0	1520	*	8165/11
	2260	*	8175/11
5.5	2550	*	8175/11
	3240	*	8185/13
7.5	4910	1.08	8195/13
11	7210	1.01	8215/16
15	9480	*	8225/17
18.5	9480	*	8225/17
	11300	*	8235/17
22	11300	*	8235/18
	14200	*	8235/18
30	18100	*	8255/19
37	23500	*	8265/19

Ratio	Frequency Hz	Motor Output Speed R/min	Electromotor	
			Motor Input Speed R/min	Pole
187 (17x11)	50	8.0	1500	4

Power kw	Output torque N.m	Service factor K	Type
0.09	25.5	*	8075/07
	51.0	*	8085/07
	91.2	1.33	8095/08
0.18	182	1.33	8105/08
0.37	255	*	8105/08
	374	1.08	8115/08
0.55	510	*	8115/09
0.75	510	*	8115/09
	765	*	8135/09
1.5	1030	*	8145/10
	1520	*	8165/10
2.2	1810	*	8165/11
	2229	1.01	8175/11
4.0	2750	*	8175/11
	4052	1.01	8185/13
5.5	4070	*	8185/13
	5572	1.02	8195/13
7.5	6350	*	8195/13
	6870	*	8205/13
11	8490	*	8215/16
	11100	1.06	8225/17
15	11300	*	8225/17
	14100	*	8235/17
18.5	14100	*	8235/18
	18100	*	8245/18
22	22200	1.05	8255/19

Model selection for double model size combination type

Ratio	Frequency Hz	Motor Output Speed R/min	Electromotor	
			Motor Input Speed R/min	Pole
319 (29x11)	50	4.7	1500	4

Power kw	Output torque N.m	Service factor K	Type
0.09	25.5	*	8075/07
	51.0	*	8085/07
	128	*	8095/08
	155	1.68	8105/08
0.18	255	*	8105/08
	311	1.68	8115/08
0.37	510	*	8115/08
	608	*	8135/08
0.55	608	*	8135/09
0.75	756	*	8135/09
	1030	*	8145/09
1.1	1810	*	8165/10
1.5	1810	*	8165/10
2.2	2750	*	8175/10
	2750	*	8175/11
	3810	1.07	8185/10
3.0	4070	*	8185/13
4.0	4070	*	8185/13
5.5	7260	*	8195/13
	9510	1.01	8215/13
7.5	9610	*	8215/13
	12800	*	8225/13
11	12800	*	8225/17
	15500	*	8235/16
	1900	1.05	8245/16
15	20300	*	8245/18
	25900	1.02	8255/17
18.5	26500	*	8255/17
22	35300	*	8265/19
	38000	1.31	8270/19
30	49700	*	8270/19
	51900	1.11	8275/19
37	57500	*	8275/19

Ratio	Frequency Hz	Motor Output Speed R/min	Electromotor	
			Motor Input Speed R/min	Pole
473 (43x11)	50	3.2	1500	4

Power kw	Output torque N.m	Service factor K	Type
0.09	25.5	*	8075/07
	51.0	*	8085/07
	128	*	8095/08
	255	1.00	8105/08
0.18	510	*	8115/08
0.37	765	*	8135/08
	948	1.08	8145/08
0.55	1030	*	8145/09
0.75	1030	*	8145/09
	1520	*	8165/09
1.1	1810	*	8165/09
1.5	2750	*	8175/10
2.2	4070	*	8185/10
3.0	5690	*	8195/11
4.0	7260	*	8195/13
	8490	*	8205/13
5.5	8490	*	8205/11
	11300	*	8215/13
	14100	1.01	8225/13
7.5	14200	*	8225/13
	18100	*	8235/16
11	23500	*	8245/16
	28200	1.08	8255/17
15	30400	*	8255/19
	38700	1.06	8265/19
18.5	40700	*	8265/19
22	50500	*	8270/10
	56400	1.07	8275/19
30	60500	*	8275/19

Ratio	Frequency Hz	Motor Output Speed R/min	Electromotor	
			Motor Input Speed R/min	Pole
731 (43x17)	50	2.1	1500	4

Power kw	Output torque N.m	Service factor K	Type
0.09	25.5	*	8075/07
	51.0	*	8085/07
	128	*	8095/08
	255	*	8105/08
	356	1.44	8115/08
0.18	510	*	8115/08
	713	1.11	8135/08
0.37	1030	*	8145/08
	1465	1.08	8165/09
0.55	1520	*	8165/09
0.75	1810	*	8165/09
	2750	*	8175/09
1.1	3240	*	8185/10
1.5	4070	*	8185/10
	5690	*	8195/11
2.2	7260	*	8195/11
3.0	8490	*	8205/13
4.0	11300	*	8215/13
	14200	*	8225/13
5.5	14200	*	8225/13
	18100	*	8235/16
	21800	1.08	8245/16
7.5	23500	*	8245/16
	29700	1.02	8255/17
11	30400	*	8255/17
	40700	*	8265/19
15	40700	*	8265/19
	50500	*	8270/19
	59400	1.02	8275/19
18.5	60800	*	8275/19

Model selection for double model size combination type

Ratio	Frequency Hz	Motor Output Speed R/min	Electromotor	
			Motor Input Speed R/min	Pole
841 (29x29)	50	1.8	1500	4

Power kw	Output torque N.m	Service factor K	Type
0.09	25.5	*	8075/07
	51.0	*	8085/07
	128	*	8095/08
	255	*	8105/08
	410	1.22	8115/08
0.18	510	*	8115/08
	765	*	8135/08
0.37	1030	*	8145/08
	1686	1.08	8165/09
0.55	1810	*	8165/09
0.75	1810	*	8165/09
	2750	*	8175/10
1.1	3240	*	8175/10
1.5	4070	*	8185/10
	6840	1.06	8195/11
2.2	7260	*	8195/11
	9610	*	8215/13
3.0	9610	*	8215/13
4.0	12800	*	8225/13
	16200	*	8235/16
5.5	16200	*	8235/16
	20600	*	8245/16
	25100	1.06	8255/17
7.5	26500	*	8255/17
	34100	1.03	8265/19
11	35300	*	8265/19
15	60800	*	8275/19
18.5	60800	*	8275/19

Ratio	Frequency Hz	Motor Output Speed R/min	Electromotor	
			Motor Input Speed R/min	Pole
1003 (59x17)	50	1.5	1500	4

Power kw	Output torque N.m	Service factor K	Type
0.09	51.0	*	8085/07
	128	*	8095/08
	255	*	8105/08
	489	1.11	8115/08
0.18	765	*	8135/08
	978	1.11	8145/08
0.37	1810	*	8165/09
0.55	1810	*	8165/09
0.75	2750	*	8175/10
	4070	1.00	8185/10
1.1	4070	*	8185/10
1.5	4070	*	8185/10
	6991	*	8195/11
2.2	7260	*	8195/11
	8490	*	8205/13
	11300	*	8215/13
3.0	11300	*	8215/13
4.0	14200	*	8225/13
	18100	*	8235/16
5.5	23500	*	8245/16
	29900	1.02	8255/17
7.5	30400	*	8255/17
	40700	1.00	8265/19
11	40700	*	8265/19
	59800	1.02	8275/19
15	60800	*	8275/19

Ratio	Frequency Hz	Motor Output Speed R/min	Electromotor	
			Motor Input Speed R/min	Pole
1225 (35x35)	50	1.2	1500	4

Power kw	Output torque N.m	Service factor K	Type
0.09	25.5	*	8075/07
	51.0	*	8085/07
	128	*	8095/08
	255	*	8105/08
	510	*	8115/08
0.18	765	*	8135/08
	1030	*	8145/08
0.37	1810	*	8165/09
0.55	2750	*	8175/09
0.75	2750	*	8175/09
	4070	*	8185/10
1.5	5690	*	8190/11
	7260	*	8195/11
2.2	8490	*	8205/11
	11300	*	8215/13
3.0	14200	*	8225/13
4.0	18100	*	8235/16
	23500	*	8245/16
5.5	30400	*	8255/19
	36400	1.11	8265/19
7.5	40700	*	8265/19

Model selection for double model size combination type

Ratio	Frequency Hz	Motor Output Speed R/min	Electromotor	
			Motor Input Speed R/min	Pole
1247 (43x29)	50	1.2	1500	4

Power kw	Output torque N.m	Service factor K	Type
0.09	25.5	*	8075/07
	51.0	*	8085/07
	128	*	8095/08
	255	*	8105/08
	510	*	8115/08
0.18	765	*	8135/08
	1030	*	8145/08
0.37	1810	*	8165/09
0.75	2750	*	8175/10
	4070	*	8185/10
1.1	5690	*	8195/11
1.5	7260	*	8195/11
2.2	8480	*	8205/13
	11300	*	8215/13
	14200	*	8225/13
3.0	14200	*	8225/13
4.0	18100	*	8235/16
	23500	*	8245/16
5.5	23500	*	8245/16
	30400	*	8255/17
	37200	1.10	8265/19
7.5	40700	*	8265/19
	50500	*	8275/19
11	50500	*	8275/19
	60800	*	8275/19

Ratio	Frequency Hz	Motor Output Speed R/min	Electromotor	
			Motor Input Speed R/min	Pole
1479 (87x17)	50	1.0	1500	4

Power kw	Output torque N.m	Service factor K	Type
0.09	128	*	8095/08
	255	*	8105/08
	510	*	8115/08
0.18	765	*	8135/09
	1030	*	8145/08
0.37	1810	*	8165/09
	3220	*	8175/09
0.55	2750	*	8175/09
0.75	4070	*	8185/10
1.1	7260	*	8195/11
1.5	7260	*	8195/11
	9420	*	8215/13
2.2	12800	*	8225/13
	16200	*	8235/16
3.0	20600	*	8245/16
4.0	20600	*	8245/18
	26500	*	8255/17
5.5	26500	*	8255/17
	35300	*	8265/19
	44000	1.37	8275/19
7.5	50500	*	8275/19
11	60800	*	8275/19

Ratio	Frequency Hz	Motor Output Speed R/min	Electromotor	
			Motor Input Speed R/min	Pole
1505 (43x35)	50	1.0	1500	4

Power kw	Output torque N.m	Service factor K	Type
0.09	25.5	*	8075/07
	51.0	*	8085/07
	128	*	8095/08
	255	*	8105/08
	510	*	8115/08
0.18	765	*	8135/08
	1030	*	8145/08
0.37	2750	*	8175/09
0.55	4070	*	8185/10
0.75	4070	*	8185/10
	6115	1.19	8195/11
1.5	8490	*	8205/13
	9420	*	8215/13
2.2	12800	*	8225/13
	16200	*	8235/16
4.0	20600	*	8245/16
	26500	*	8255/17
5.5	35300	*	8265/19
	44700	1.12	8275/19
7.5	50500	*	8275/19
11	60800	*	8275/19

Model selection for double model size combination type

Ratio	Frequency Hz	Motor Output Speed R/min	Electromotor	
			Motor Input Speed R/min	Pole
1849 (43x43)	50	0.81	1500	4

Power kw	Output torque N.m	Service factor K	Type
0.09	25.5	*	8075/08
	51.0	*	8085/08
	128	*	8095/08
	255	*	8105/08
	510	*	8115/08
0.18	765	*	8135/09
	1030	*	8145/08
0.37	2750	*	8175/09
0.75	4070	*	8185/10
	7260	*	8195/11
11	7260	*	8195/11
1.5	8490	*	8205/11
	11300	*	8215/13
	14200	*	8225/13
2.2	14200	*	8225/13
	18100	*	8235/16
	22100	1.07	8245/16
3.0	23500	*	8245/16
4.0	23500	*	8245/16
	30400	*	8255/17
5.5	40700	*	8265/19
	50500	*	8270/19
7.5	50500	*	8270/19
	60800	*	8275/19

Ratio	Frequency Hz	Motor Output Speed R/min	Electromotor	
			Motor Input Speed R/min	Pole
2065 (59x35)	50	0.73	1500	4

Power kw	Output torque N.m	Service factor K	Type
0.09	51.0	*	8085/07
	128	*	8095/08
	255	*	8105/08
	510	*	8115/08
0.18	765	*	8135/08
	1030	*	8145/08
	1810	*	8165/09
0.37	2750	*	8175/09
0.55	4070	*	8185/10
0.75	7260	*	8195/11
1.1	7260	*	8195/11
1.5	11300	*	8215/13
	14200	*	8225/13
2.2	18100	*	8235/16
	23500	*	8245/16
3.0	23500	*	8245/16
4.0	30400	*	8255/17
5.5	40700	*	8265/19
	50500	*	8270/19
7.5	60800	*	8275/19

Ratio	Frequency Hz	Motor Output Speed R/min	Electromotor	
			Motor Input Speed R/min	Pole
2537 (59x43)	50	0.59	1500	4

Power kw	Output torque N.m	Service factor K	Type
0.09	51.0	*	8085/07
	128	*	8095/08
	255	*	8105/08
	510	*	8115/08
0.18	765	*	8135/08
	1030	*	8145/08
	1810	*	8165/09
0.37	4070	*	8185/10
0.55	4070	*	8185/10
0.75	7260	*	8195/11
	8490	*	8205/11
1.1	11300	*	8215/13
1.5	11300	*	8215/13
	14200	*	8225/13
2.2	18100	*	8235/16
	23500	*	8245/16
3.0	30400	*	8255/17
4.0	30400	*	8255/19
5.5	40700	*	8265/19
	50500	*	8270/19
7.5	60800	*	8275/19

Model selection for double model size combination type

Ratio	Frequency Hz	Motor Output Speed R/min	Electromotor	
			Motor Input Speed R/min	Pole
3045 (87x35)	50	0.49	1500	4

Power kw	Output torque N.m	Service factor K	Type
0.09	128	*	8095/08
	255	*	8105/08
	510	*	8115/08
0.18	765	*	8135/08
	1030	*	8145/08
	1810	*	8165/09
	2750	*	8175/09
0.37	4070	*	8185/10
0.55	4070	*	8185/10
0.75	7260	*	8195/11
1.1	9420	*	8215/13
1.5	9420	*	8215/13
	12800	*	8225/13
2.2	16200	*	8235/16
	20600	*	8245/16
3.0	26500	*	8255/17
4.0	26500	*	8255/17
5.5	35300	*	8265/19
	50500	*	8270/19
7.5	60800	*	8275/19

Ratio	Frequency Hz	Motor Output Speed R/min	Electromotor	
			Motor Input Speed R/min	Pole
3481 (59x59)	50	0.43	1500	4

Power kw	Output torque N.m	Service factor K	Type
0.09	128	*	8095/08
	255	*	8105/08
	510	*	8115/09
0.18	765	*	8135/08
	1030	*	8145/08
	1810	*	8165/09
	2750	*	8175/09
0.37	4070	*	8185/10
0.55	4070	*	8185/10
0.75	7260	*	8195/11
	8490	*	8205/11
1.1	11300	*	8215/13
1.5	11300	*	8215/13
	14200	*	8225/13
2.2	18100	*	8235/16
	23500	*	8245/16
3.0	30400	*	8255/17
4.0	30400	*	8255/17
5.5	40700	*	8265/19
	50500	*	8270/19
7.5	60800	*	8275/19

Ratio	Frequency Hz	Motor Output Speed R/min	Electromotor	
			Motor Input Speed R/min	Pole
5133 (87x59)	50	0.59	1500	4

Power kw	Output torque N.m	Service factor K	Type
0.09	128	*	8095/08
	255	*	8105/08
	510	*	8115/08
0.18	765	*	8135/08
	1030	*	8145/08
	1810	*	8165/09
	2750	*	8175/09
0.37	4070	*	8185/10
0.55	4070	*	8185/10
0.75	7260	*	8195/11
	8490	*	#8205/11
1.5	11300	*	#8215/13
	14200	*	#8225/13
2.2	18100	*	#8235/16
	23500	*	#8245/16
3.0	30400	*	#8255/17
4.0	30400	*	#8255/17
5.0	40700	*	#8265/19
	50500	*	#8270/19
7.5	60800	*	#8275/19

Model selection for double model size combination type

Ratio	Frequency Hz	Motor Output Speed R/min	Electromotor	
			Motor Input Speed R/min	Pole
6177 (59x59)	50	0.24	1500	4

Power kw	Output torque N.m	Service factor K	Type
0.09	510	*	8115/09
0.18	765	*	8135/09
	1030	*	8145/09
	1810	*	8165/09
	2750	*	8175/09
0.37	4070	*	8185/10
0.55	4070	*	8185/10
0.75	7260	*	8195/11
1.1	9420	*	8215/13
1.5	9420	*	8215/13
	12800	*	8225/13
2.2	16200	*	8235/16
	20600	*	8245/16
3.0	26500	*	8255/17
4.0	26500	*	8255/17
5.5	35300	*	8265/19
	50500	*	8270/19
7.5	60800	*	8275/19

Ratio	Frequency Hz	Motor Output Speed R/min	Electromotor	
			Motor Input Speed R/min	Pole
7569 (87x87)	50	0.43	1500	4

Power kw	Output torque N.m	Service factor K	Type
0.09	510	*	8115/09
0.18	765	*	8135/09
	1030	*	8145/09
	1810	*	8165/09
	2750	*	8175/09
0.37	4070	*	8185/10
0.55	4070	*	8185/10
0.75	7260	*	8195/11
1.1	9420	*	8215/13
1.5	9420	*	8215/13
	12800	*	8225/13
2.2	16200	*	8235/16
	20600	*	8245/16
3.0	26500	*	8255/17
4.0	26500	*	8255/17
5.5	35300	*	8265/19
	50500	*	8270/19
7.5	60800	*	8275/19

Dimension chart for AXWED 8065/06~8145/10 double state horizontal cycloidal speed reducer

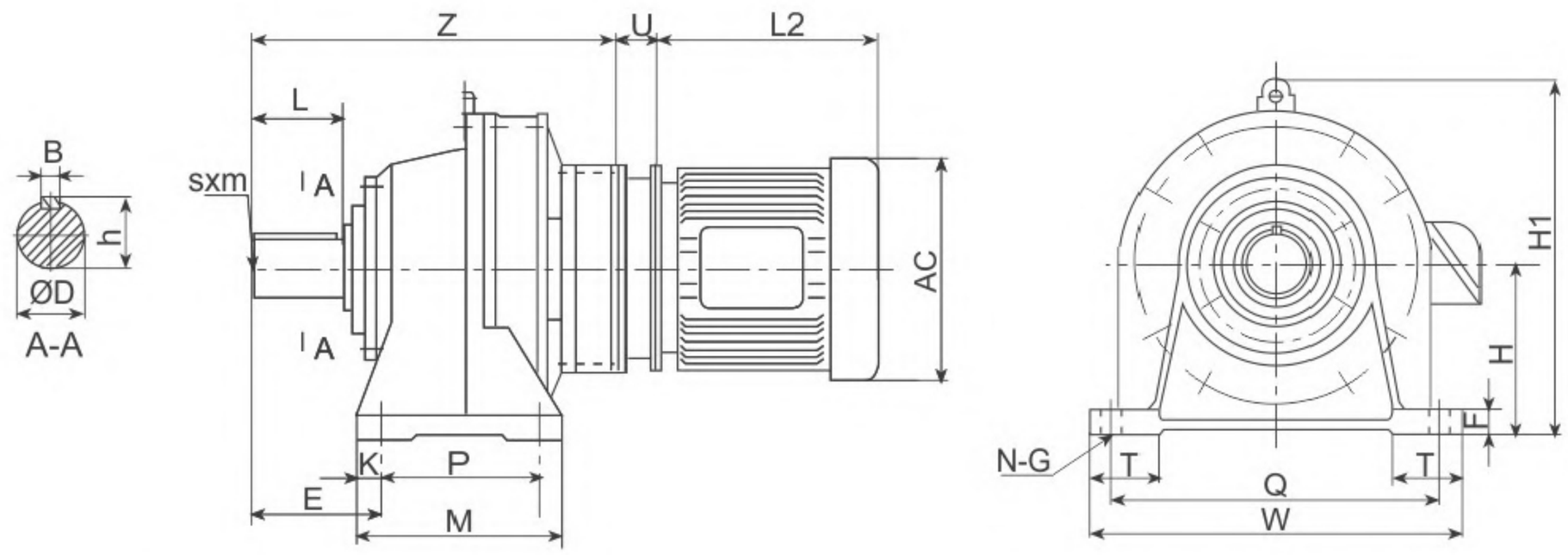

Type \ Size	Z	H	DC	P	Q	M	W	E	K	H1	F	T	U	N-G	Output Terminal					
															D	L	B	t	h	sxm
8065/06	125	80	110	60	120	88	148	42	14	138	10	35		4-Φ9	14	25	5	11	16	–
8075/06	131	80	110	60	120	88	148	47	14	138	10	35		4-Φ9	14	30	6	14.5	20.5	–
8085/06	135	90	134	75	120	101	148	52	14	157	13	35		4-Φ9	22	35	6	18.5	25	–
8095/07	190	100	150	90	150	130	180	60	15	207	15	40		4-Φ11	28	35	8	24	31	–
8105/07	204	100	150	90	150	135	180	60	15	207	15	40		4-Φ11	28	35	8	24	31	–
8115/07	240	120	204	115	190	155	230	82	20	257	15	55		4-Φ14	38	55	10	33	41	–
8115/09	252	120	204	115	190	155	230	82	20	257	15	55		4-Φ14	38	55	10	33	41	M10×18
8135/07	294	150	230	145	290	195	330	100	25	300	22	65		4-Φ18	50	70	14	44.5	53.5	M10×18
8135/09	303	150	230	145	290	195	330	100	25	300	22	65		4-Φ18	50	70	14	44.5	53.5	M10×18
8135/10	317	150	230	145	290	195	330	100	25	300	22	65		4-Φ18	50	70	14	44.5	53.5	M10×18
8145/07	314	150	230	145	290	195	330	120	25	300	22	65		4-Φ18	50	90	14	44.5	53.5	M10×18
8145/09	323	150	230	145	290	195	330	120	25	300	22	65		4-Φ18	50	90	14	44.5	53.5	M10×18
8145/10	337	150	230	145	290	195	330	120	25	300	22	65		4-Φ18	50	90	14	44.5	53.5	M10×18

Dimension chart for AXWED 8165/09~8275/19 double state horizontal cycloidal speed reducer

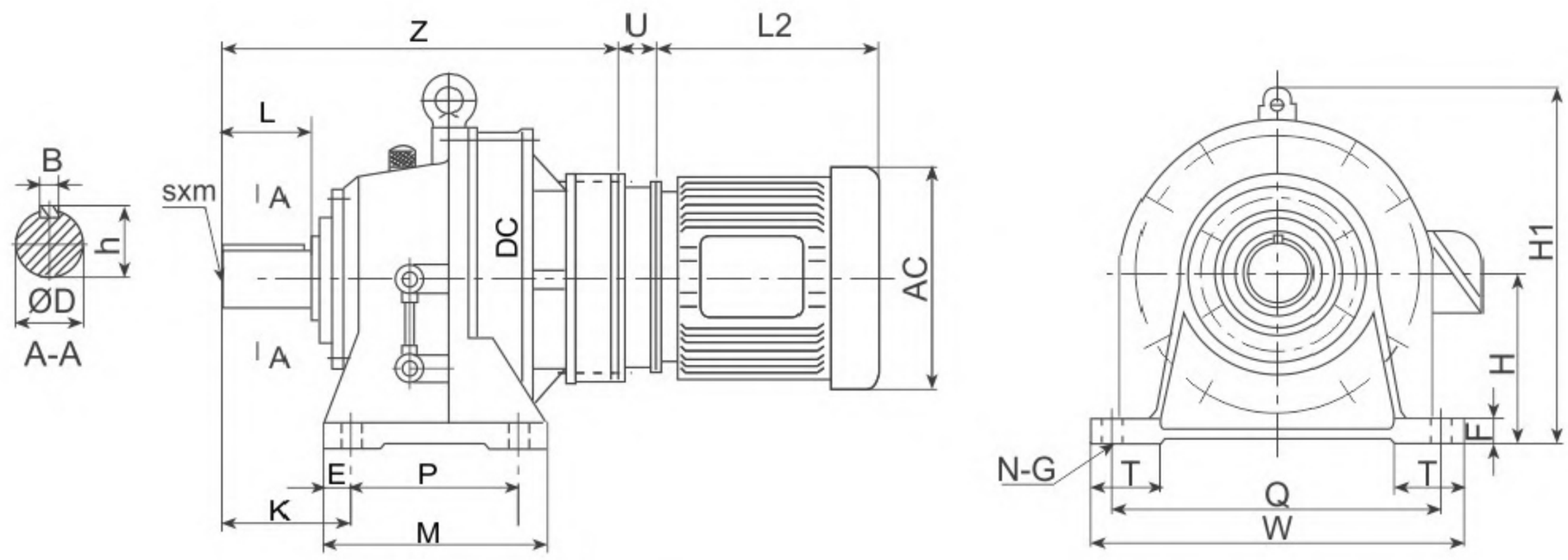

Type \ Size	Z	H	DC	P	Q	M	W	E	H1	F	T	U	N-G	Output Terminal					
														D	L	B	t	h	sxm
8165/09	373	160	300	150	370	238	410	139	356	25	75		4-Φ18	60	90	18	53	64	M10×18
8165/10	384	160	300	150	370	238	410	139	356	25	75		4-Φ18	60	90	18	53	64	M10×18
8165/11	389	160	300	150	370	238	410	139	356	25	75		4-Φ18	60	90	18	53	64	M10×18
8175/09	418	200	340	275	380	335	430	125	425	30	80		4-Φ22	70	90	20	62.5	74.5	M12×24
8175/10	432	200	340	275	380	335	430	125	425	30	80		4-Φ22	70	90	20	62.5	74.5	M12×24
8175/11	436	200	340	275	380	335	430	125	425	30	80		4-Φ22	70	90	20	62.5	74.5	M12×24
8185/10	474	220	370	320	420	380	470	145	460	30	85		4-Φ22	80	110	22	71	85	M12×24
8185/13	496	220	370	320	420	380	470	145	460	30	85		4-Φ22	80	110	22	71	85	M12×24
8195/11	556	250	430	380	480	440	530	170	529	35	90		4-Φ26	95	135	25	86	100	M20×34
8195/13	572	250	430	380	480	440	530	170	529	35	90		4-Φ26	95	135	25	86	100	M20×34
8205/11	602	250	448	360	440	440	530	215	530	35	100		4-Φ26	100	165	28	90	106	M20×34
8205/13	628	250	448	360	440	440	530	215	530	35	100		4-Φ26	100	165	28	90	106	M20×34
8215/13	650	265	485	395	480	475	580	210	575	40	110		4-Φ26	110	165	28	100	116	M20×34
8215/16	675	265	485	395	480	475	580	210	575	40	110		4-Φ26	110	165	28	100	116	M20×34
8215/17	692	280	526	420	540	520	620	230	610	40	115		4-Φ33	120	165	32	109	127	M20×34
8235/16	736	280	526	420	540	520	620	230	610	40	115		4-Φ33	120	165	32	109	127	M20×34
8235/18	778	300	562	460	580	560	670	260	667	45	120		4-Φ33	130	200	32	119	137	M24×41
8245/16	800	300	562	460	580	560	670	260	667	45	120		4-Φ33	130	200	32	119	137	M24×41
8245/18	816	335	614	480	630	580	720	263	729	45	128		4-Φ39	140	200	36	128	148	M24×41
8255/18	837	335	614	480	630	580	720	263	729	45	128		4-Φ39	140	200	36	128	148	M24×41
8255/17	956	375	670	520	670	630	780	320	815	50	140		4-Φ39	160	240	40	147	169	M24×49
8255/19	978	375	670	520	670	630	780	320	815	50	140		4-Φ39	160	240	40	147	169	M24×49
8265/19	1088	400	736	590	770	764	880	390	874	55	160		4-Φ45	170	300	40	157	179	M30×49
8275/19	1351	540	950	420×2	1050	1046	1160	485	1163	60	200		6-Φ45	180	330	45	165	190	M42×80

Dimension chart for AXLED 8065/06~8145/10 double state vertical cycloidal speed reducer

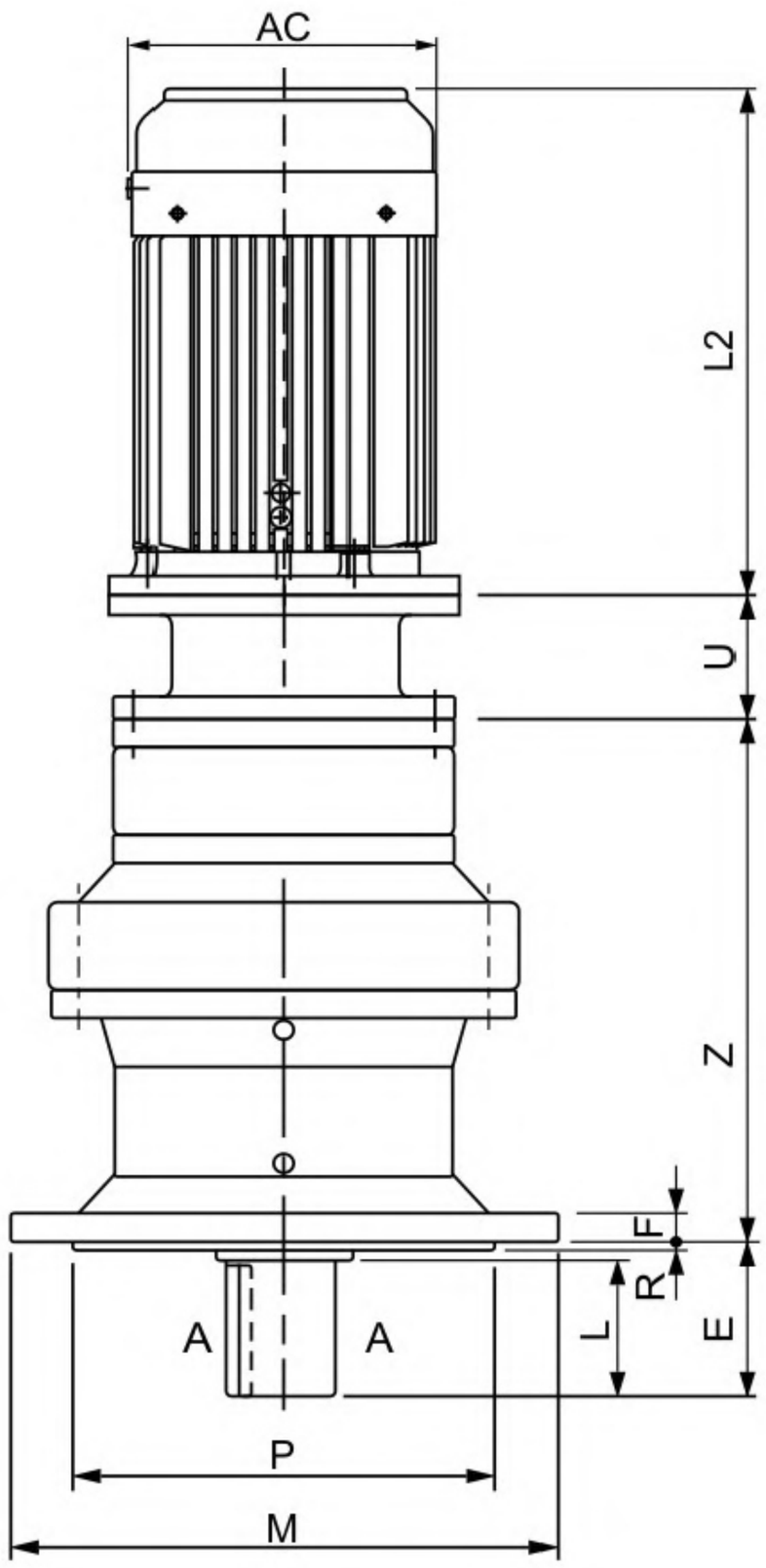

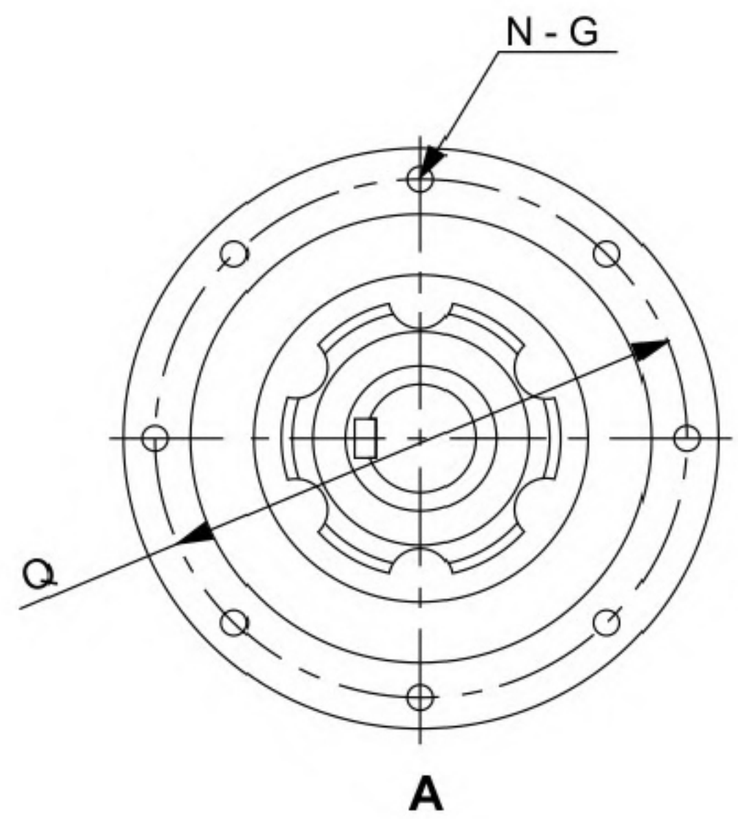

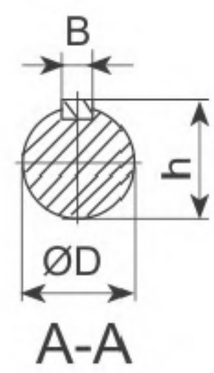

Size / Type	Z	E	F	R	M	Q	P	U	N-G	Output Terminal					
										D	L	B	t	h	sxm
8065/06	111	34	8	3	120	102	80		6-Φ9	14	25	5	11	16	–
8075/06	124	42	9	3	160	134	110		4-Φ11	18	30	6	14.5	20.5	–
8085/06	135	48	9	3	160	134	110		4-Φ11	18	30	6	14.5	20.5	–
8095/07	142	48	9	3	160	134	110		4-Φ11	28	35	8	24	31	–
8105/07	156	48	9	3	160	134	110		4-Φ11	28	35	8	24	31	–
8115/07	171	69	13	4	210	180	140		6-Φ11	38	55	10	33	41	–
8115/09	183	69	13	4	210	180	140		6-Φ11	38	55	10	33	41	–
8135/07	218	76	15	4	260	230	200		6-Φ11	50	61	14	44.5	53.5	M10×18
8135/09	227	76	15	4	260	230	200		6-Φ11	50	61	14	44.5	53.5	M10×18
8135/10	241	76	15	4	260	230	200		6-Φ11	50	61	14	44.5	53.5	M10×18
8145/07	218	96	15	4	260	230	200		6-Φ11	50	61	14	44.5	53.5	M10×18
8145/09	227														
8145/10	241														

Dimension chart for AXLED 8165/09~8275/19 double state vertical cycloidal speed reducer

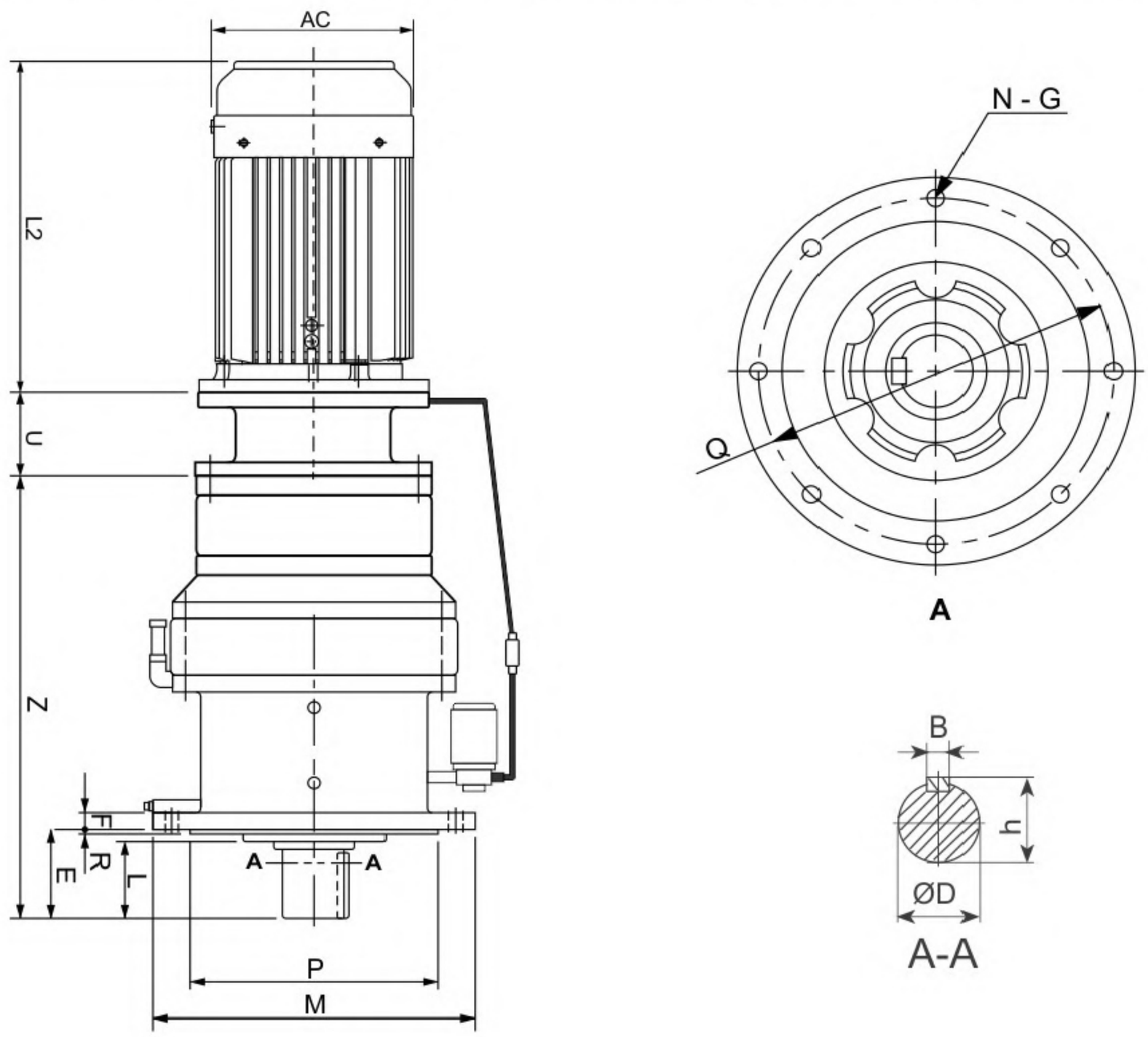

Size / Type	Z	E	F	R	M	Q	P	U	N-G	K	W	Output Terminal					
												D	L	B	t	h	sxm
8165/10	285	89	20	4	340	310	270		6-Φ11	217	200	60	80	18	53	64	M10×18
8165/11	299																
8165/11	300																
8175/10	324	94	22	5	400	360	316		8-Φ14	222	225	70	84	20	62.5	74.5	M12×24
8175/11	338																
8175/13	342																
8185/10	364	110	22	5	430	390	345		8-Φ18	237	240	80	100	22	71	85	M12×24
8185/13	386																
8195/13	411	145	30	6	490	450	400		12-Φ18	360	200	95	125	25	86	100	M20×34
8195/16	427																
8205/11	398	204	30	5	455	405	355		8-Φ22	376	287	100	165	28	100	106	M20×34
8205/13	424																
8215/16	447	203	35	7	490	440	390		8-Φ24	400	290	110	165	28	106	116	M20×34
8215/17	472																
8225/16	482	210	35	10	535	475	415		8-Φ27	400	326	120	165	32	116	127	M20×34
8225/17	526																
8235/16	529	250	40	10	570	510	450		8-Φ27	413	344	130	200	32	127	137	M24×41
8235/18	551																
8245/17	566	250	40	10	635	560	485		8-Φ33	420	365	140	200	36	137	148	M24×41
8245/18	587																
8255/18	661	295	45	10	685	610	535		8-Φ33	432	425	160	240	40	148	169	M30×49
8255/19	684																
8265/19	728	360	50	10	750	660	570		8-Φ39	460	431	170	300	40	157	179	M30×49
8275/19	994	355	60	10	1160	1020	900		8-Φ39	610	613	180	320	45	165	190	M42×80

Double stage and double shaft type reducer selection table

Output rotating speed is 1500r/min

Ratio	99 (11x9)		121 (11x11)		187 (17x11)		289 (17x17)		319 (29x11)		473 (43x11)		595 (35x17)		649 (59x11)		731 (43x17)		841 (29x29)		1003 (59x17)	
Output speed r/min	15.1		12		8.0		5.2		4.7		3.2		2.5		2.3		2.1		1.8		1.5	
Model	Power kW	Torque N.m	Power kW	Torque N.m	Power kW	Torque N.m	Power kW	Torque N.m	Power kW	Torque N.m	Power kW	Torque N.m	Power kW	Torque N.m	Power kW	Torque N.m	Power kW	Torque N.m	Power kW	Torque N.m	Power kW	Torque N.m
8075/06	–	–	0.10	*25.5	0.10	*25.5	0.10	*25.5	0.10	*25.5	0.10	*25.5	0.10	*25.5	–	–	0.10	*25.5	0.10	*25.5	–	–
8085/06	–	–	0.10	*46.0	0.10	*25.5	0.10	*51.0	0.10	*51.0	0.10	*51.0	0.10	*51.0	0.10	*51.0	0.10	*51.0	0.10	*51.0	0.10	*51.0
8095/07	–	–	0.16	106	0.12	128	0.10	*128	0.10	*128	0.10	*128	0.10	*128	0.10	*128	0.10	*128	0.10	*128	0.10	*128
8105/07	–	–	0.31	206	0.25	255	0.15	255	0.15	255	0.10	*255	0.10	*255	0.10	*255	0.10	*255	0.10	*255	0.10	*255
8115/07	–	–	0.40	262	0.40	405	0.32	510	0.30	510	0.20	510	0.17	510	0.17	510	0.13	510	0.11	510	0.10	*510
8115/09	–	–	0.76	497	0.50	510	–	–	–	–	–	–	–	–	–	–	–	–	–	–	–	–
8135/09	–	–	–	–	–	–	–	–	–	–	0.30	765	0.23	765	0.22	765	0.20	*765	0.20	*765	0.20	*765
8135/10	–	–	1.06	695	0.75	765	0.49	765	0.44	765	–	–	–	–	–	–	–	–	–	–	–	–
8135/11	1.36	579	1.17	765	–	–	–	–	–	–	–	–	–	–	–	–	–	–	–	–	–	–
8145/09	–	–	–	–	–	–	–	–	–	–	0.40	1030	0.32	1030	0.29	1030	0.26	1030	0.23	1030	0.20	*1030
8145/10	–	–	–	–	0.85	860	0.65	1030	0.60	1030	0.40	1030	–	–	–	–	–	–	0.23	1030	–	–
8145/11	1.83	982	1.45	951	0.98	1000	–	–	–	–	–	–	–	–	–	–	–	–	–	–	–	–
8165/09	–	–	–	–	–	–	1.05	1810	1.05	1810	0.71	1810	0.56	1810	0.52	1810	0.46	1810	0.40	1810	0.40	*1810
8165/10	–	–	–	–	1.78	1810	1.23	1810	1.05	1810	–	–	–	–	–	–	–	–	–	–	–	–
8165/11	3.22	1727	–	–	–	–	–	–	–	–	–	–	–	–	–	–	–	–	–	–	–	–
8175/11	–	–	–	–	–	–	–	–	–	–	1.06	2730	0.85	2730	0.78	2750	0.69	2750	0.60	2750	0.51	2750
8175/11	–	–	–	–	2.71	2750	1.75	2750	1.59	2750	1.07	2750	0.85	2750	0.78	2750	–	–	0.60	2750	–	–
8175/13	4.87	2612	3.89	2750	2.71	2750	1.75	2750	1.59	2750	–	–	–	–	–	–	–	–	–	–	–	–
8185/10	–	–	–	–	–	–	2.60	4070	2.35	4070	1.59	4070	1.26	4070	1.16	4070	1.03	4070	0.89	4070	0.75	*4070
8185/13	–	–	5.09	3340	4.02	4070	2.60	4070	2.35	4070			1.26	4070	1.16	4070	–	–	–	–	–	–
8195/13	–	–	–	–	–	–	–	–	–	–	–	–	–	–	–	–	1.67	6600	1.59	7260	1.29	6990
8195/16	–	–	–	–	6.00	6079	4.51	7060	4.20	7060	2.83	7260	2.25	7260	2.06	7260	1.83	7260	1.59	7260	1.34	7260
8205/13	–	–	–	–	–	–	–	–	–	–	–	–	–	–	–	–	–	–	–	–	–	–
8205/16	–	–	8.69	5690	6.79	6870	4.51	7060	4.20	7060	3.31	8490	2.64	8490	2.41	8490	2.20	*8490	–	–	2.20	*8490
8215/13	–	–	9.91	6500	8.39	8490	5.43	8490	5.56	8490	4.40	11300	3.51	11300	3.21	11300	2.85	11300	2.20	*9610	2.20	*11300
8215/16	–	–	11.1	7260	8.39	8490	5.43	8490	5.56	8490	4.40	11300	–	–	–	–	–	–	–	–	–	–
8225/16	–	–	–	–	–	–	7.23	11300	7.38	11300	5.55	14200	4.41	14200	4.04	14200	3.59	14200	2.80	12800	2.62	14200
8225/17	–	–	14.5	9480	11.7	11300	7.23	11300	7.38	11300	–	–	–	–	–	–	–	–	–	–	–	–
8235/16	–	–	17.2	11300	13.9	14100	9.08	14200	8.99	14200	7.08	18100	5.62	18100	5.16	18100	4.58	18100	3.55	16200	3.34	18100
8235/18	–	–	17.2	11300	13.9	14100	–	–	–	–	–	–	–	–	–	–	–	–	–	–	–	–
8245/17	–	–	–	–	17.2	17400	11.6	18100	11.6	18100	9.18	23500	7.30	23500	6.69	23500	5.94	23500	4.52	20600	4.43	23500
8245/18	–	–	21.7	14200	17.9	18100	11.6	18100	11.7	18100	9.18	23500	7.30	23500	6.69	23000	–	–	–	–	–	–
8255/18	–	–	27.5	18100	23.2	23500	15.0	23500	15.3	23500	11.9	30400	9.44	30400	8.65	30400	7.68	30400	5.81	26500	5.59	30400
8255/19	–	–	27.7	18100	23.2	23500	–	–	–	–	–	–	–	–	–	–	–	–	–	–	–	–
8265/19	–	–	35.9	23500	30.0	30400	19.4	30400	20.1	30400	15.9	40700	12.6	40700	11.6	40700	10.3	40700	7.75	35300	7.49	40700
8275/19	–	–	–	–	–	–	–	–	28.8	–	19.7	50500	–	–	14.4	50500	12.8	50500	11.1	50500	9.29	20500

Double stage and double shaft type reducer selection table

Output rotating speed is 1500r/min

Ratio	1225 (35x35)		1247 (43x29)		1479 (67x17)		1505 (43x35)		1849 (43x43)		2065 (59x35)		2537 (59x43)		3045 (87x35)		3481 (53x59)		5133 (87x59)		6177 (87x71)		7569 (87x57)	
Output speed r/min	1.2		1.2		1		0.99		0.81		0.73		0.59		0.49		0.43		0.29		0.29		0.24	
Model	Power kW	Torque N.m	Power kW	Torque N.m	Power kW	Torque N.m	Power kW	Torque N.m	Power kW	Torque N.m	Power kW	Torque N.m	Power kW	Torque N.m	Power kW	Torque N.m	Power kW	Torque N.m	Power kW	Torque N.m	Power kW	Torque N.m	Power kW	Torque N.m
8075/06	0.10	*25.5	0.10	*25.5	–	–	0.10	*25.5	0.10	*25.5	–	–	–	–	–	–	–	–	–	–	–	–	–	–
8085/06	0.10	*51.0	0.10	*51.0	–	–	0.10	*51.0	0.10	*51.0	0.10	*51.0	0.10	*51.0	–	–	–	–	–	–	–	–	–	–
8095/07	0.10	*128	0.10	*128	0.10	*128	0.10	*128	0.10	*128	0.10	*128	0.10	*128	0.10	*128	0.10	*128	0.10	*128	–	–	–	–
8105/07	0.10	*255	0.10	*255	0.10	*255	0.10	*255	0.10	*255	0.10	*255	0.10	*255	0.10	*255	0.10	*255	0.10	*255	–	–	–	–
8115/07	0.10	*510	0.10	*510	0.10	*510	0.10	*510	0.10	*510	0.10	*510	0.10	*510	0.10	*510	0.10	*510	0.10	*510	–	–	–	–
8115/09	–	–	–	–	–	–	–	–	–	–	–	–	–	–	–	–	–	–	–	–	0.10	*510	0.10	*510
8135/09	0.20	*765	0.20	*765	0.20	*765	0.20	*765	0.20	*765	0.20	*765	0.20	*765	0.20	*765	0.20	*765	0.20	*765	–	–	–	–
8135/10	–	–	–	–	–	–	–	–	–	–	–	–	–	–	–	–	–	–	–	–	0.20	*765	0.20	*765
8135/11	–	–	–	–	–	–	–	–	–	–	–	–	–	–	–	–	–	–	–	–	–	–	–	–
8145/09	0.20	*1030	0.20	*1030	0.20	*1030	0.20	*1030	0.20	*1030	0.20	*1030	0.20	*1030	0.20	*1030	0.20	*1030	0.20	*1030	–	–	–	–
8145/10	–	–	–	–	–	–	–	–	–	–	–	–	–	–	–	–	–	–	–	–	0.20	*1030	0.20	*1030
8145/11	–	–	–	–	–	–	–	–	–	–	–	–	–	–	–	–	–	–	–	–	–	–	–	–
8165/09	0.40	*1810	0.40	*1810	0.40	*1810	0.20	*1810	0.20	*1810	0.20	*1810	0.20	*1810	0.20	*1810	0.20	*1810	0.20	*1810	0.20	*1810	0.20	*1810
8165/10	–	–	–	–	–	–	–	–	–	–	–	–	–	–	–	–	–	–	–	–	–	–	–	–
8165/11	–	–	–	–	–	–	–	–	–	–	–	–	–	–	–	–	–	–	–	–	–	–	–	–
8175/11	0.41	2750	0.41	2750	0.40	*2750	0.40	*2750	0.40	*2750	0.40	*2750	0.20	*2750	0.20	*2750	0.20	*2750	0.20	#2750	0.20	#2750	0.20	#2750
8175/11	–	–	–	–	–	–	–	–	–	–	–	–	–	–	–	–	–	–	–	–	–	–	–	–
8175/13	–	–	–	–	–	–	–	–	–	–	–	–	–	–	–	–	–	–	–	–	–	–	–	–
8185/10	0.75	*4070	0.75	*4070	0.75	*4070	0.75	*4070	0.75	*4070	0.40	*4070	0.40	*4070	0.40	*4070	0.40	*4070	0.40	*4070	0.40	*4070	0.40	*4070
8185/13	–	–	–	–	–	–	–	–	–	–	–	–	–	–	–	–	–	–	–	–	–	–	–	–
8195/13	1.07	7260	1.07	7260	0.91	7260	0.75	*7260	0.75	*7260	0.75	*7260	0.75	*7260	0.75	*7260	0.75	*7260	0.75	*7260	0.75	*7260	0.75	*7260
8195/16	1.09	7260	–	–	0.91	7260	–	–	–	–	–	–	–	–	–	–	–	–	–	–	–	–	–	–
8205/13	–	–	–	–	–	–	–	–	1.50	*8120	–	–	0.75	*8420	–	–	0.75	*8490	#0.75	*8490	–	–	–	–
8205/16	2.20	*8490	2.20	*8490	–	–	1.50	*8490	1.50	*8490	1.50	*8490	0.75	*8490	–	–	–	–	–	–	–	–	–	–
8215/13	2.20	*11300	2.20	*11300	1.50	*9420	1.50	*9420	1.50	*11300	1.50	*11300	1.50	*11300	1.50	*9420	1.50	*11300	#1.50	*11300	1.50	*9420	1.50	*9420
8215/16	–	–	–	–	–	–	–	–	–	–	–	–	–	–	–	–	–	–	–	–	–	–	–	–
8225/16	2.20	*14200	2.20	*14200	2.20	*12800	2.20	*12800	1.50	*14200	1.50	*14200	1.50	*14200	1.50	*12800	1.50	*14200	#1.50	*14200	1.50	*12800	1.50	*12800
8225/17	–	–	–	–	–	–	–	–	–	–	–	–	–	–	–	–	–	–	–	–	–	–	–	–
8235/16	2.73	18100	2.69	18100	2.20	*16200	2.20	*16200	2.20	*18100	2.20	*18100	2.20	*18100	2.20	*16200	2.20	*18100	#2.20	*18100	2.20	*16200	2.20	*16200
8235/18	–	–	–	–	–	–	–	–	–	–	–	–	–	–	–	–	–	–	–	–	–	–	–	–
8245/17	3.54	23500	3.48	23500	2.57	20600	2.53	20600	2.35	23500	2.20	*23500	2.20	*23500	2.20	*20600	2.20	*23500	#2.20	*23500	2.20	*20600	2.20	*20600
8245/18	–	–	–	–	–	–	–	–	–	–	–	–	–	–	–	–	–	–	–	–	–	–	–	–
8255/18	4.59	30400	4.50	30400	3.70	*26500	3.70	*26500	3.70	*30400	3.70	*30400	3.70	*30400	3.70	*26500	3.70	*30400	#3.70	*30400	3.70	*26500	3.70	*26500
8255/19	–	–	–	–	–	–	–	–	–	–	–	–	–	–	–	–	–	–	–	–	–	–	–	–
8265/19	6.14	40700	6.02	40700	5.50	*35300	5.50	*35300	5.50	*40700	5.50	*40700	5.50	*40700	5.50	*35300	5.50	*40700	#5.50	*40700	5.50	*35300	5.50	*35300
8275/19	–	–	7.48	50500	6.30	50500	6.20	50500	5.50	*50500	5.50	*50500	5.50	*50500	5.50	*50500	5.50	*50500	5.50	*50500	5.50	*50500	5.50	*50500

Dimension chart for AXWE 8065/06~8145/10 double state horizontal cycloidal speed reducer

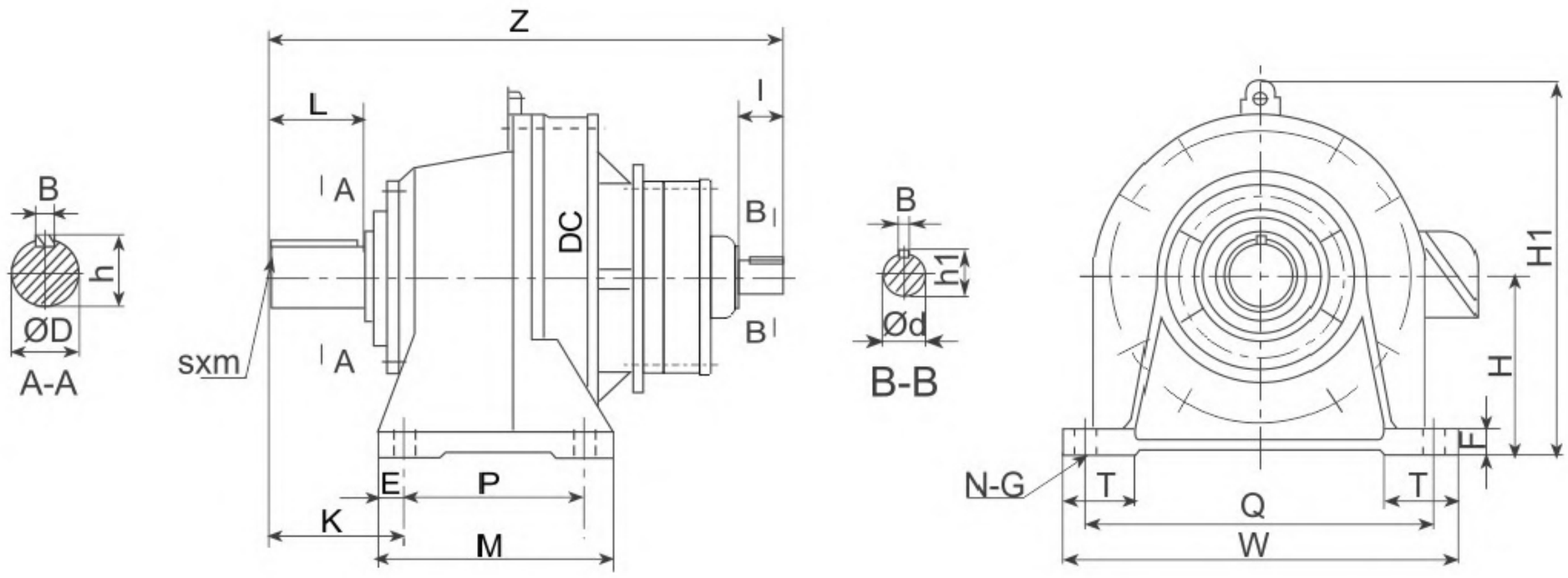

Size / Type	Z	H	DC	P	Q	M	W	E	K	H1	F	T	N-G	Input Terminal					Output Terminal						Weight kg
														d	l	b	t1	h1	D	L	B	t	h	sxm	
8065/06	178	80	110	60	120	88	148	42	14	135	10	35	4–Φ9	12	25	4	9.5	13.5	14	25	5	11	16	–	4.5
8075/06	184	80	110	60	120	88	148	47	14	135	10	35	4–Φ9	12	25	4	9.5	13.5	18	30	6	14.5	20.5	–	4.5
8085/06	218	90	134	75	120	101	148	52	14	157	13	35	4–Φ9	12	25	4	9.5	13.5	22	35	6	18.5	25	–	5.2
8095/07	243	100	150	90	150	135	180	60	15	207	15	40	4–Φ11	12	25	4	9.5	13.5	28	35	8	24	31	–	13
8105/07	257	100	150	90	150	135	180	60	15	207	15	40	4–Φ11	12	25	4	9.5	13.5	28	35	8	24	31	–	16
8115/07	293	120	204	115	190	155	230	82	20	257	15	55	4–Φ14	12	25	4	9.5	13.5	38	55	10	33	41	–	25
8115/09	312													15	25	5	12	17							30
8135/07	347	150	230	145	290	195	330	100	25	300	22	65	4–Φ18	12	25	4	9.5	13.5	50	70	14	44.5	53.5	M10×18	42
8135/09	363	150	230	145	290	195	330	100	25	300	22	65	4–Φ18	15	25	5	12	17	50	70	14	44.5	53.5	M10×18	46
8135/10	369	150	230	145	290	195	330	100	25	300	22	65	4–Φ18	15	25	5	12	17	50	70	14	44.5	53.5	M10×18	51
8145/07	367	150	230	145	290	195	330	120	25	300	22	65	4–Φ18	12	25	4	9.5	13.5	50	90	14	44.5	53.5	M10×18	41
8145/09	383													15	25	5	12	17							46
8145/10	389													15	25	5	12	17							51

Dimension chart for AXWE 8165/09~8275/19 double state horizontal cycloidal speed reducer

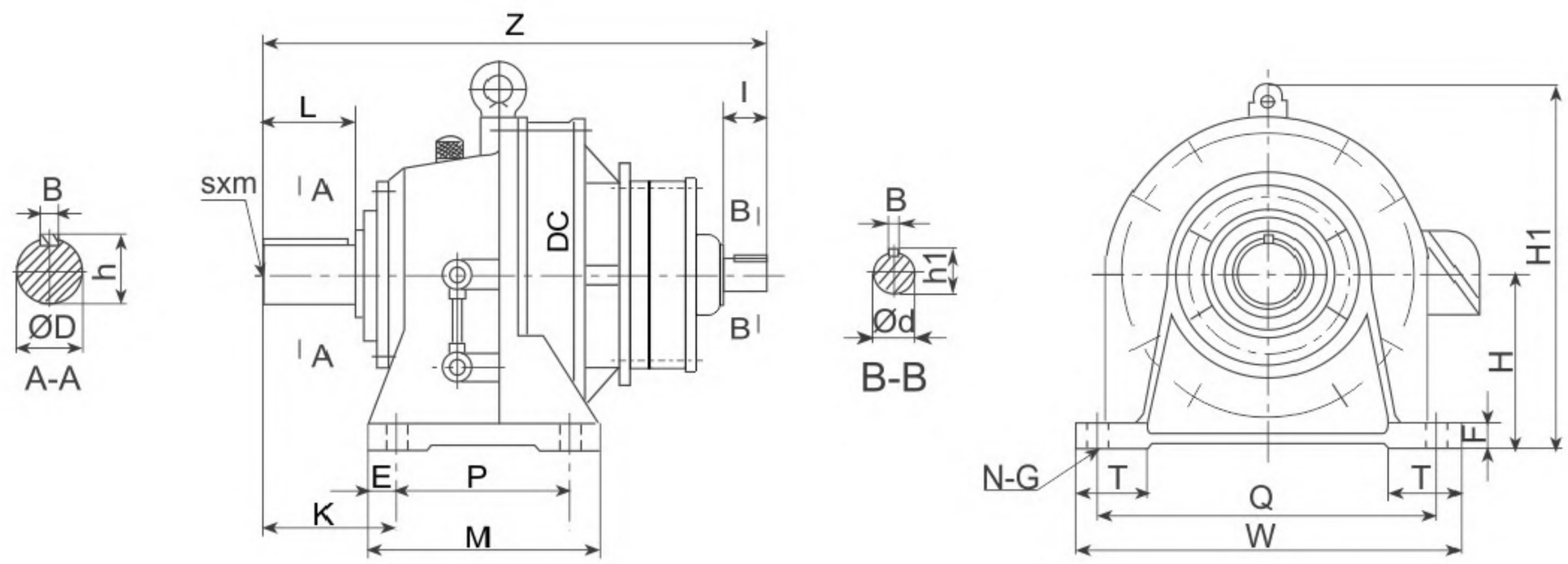

Size / Type	Z	H	DC	P	Q	M	W	E	H1	F	T	N-G	Input Terminal					Output Terminal						Weight kg
													d	l	b	t1	h1	D	L	B	t	h	sxm	
8165/09	433	160	300	150	370	238	410	139	356	25	75	4-Φ18	15	25	5	12	17	60	90	18	53	64	M10×18	86
8165/10	439	160	300	150	370	238	410	139	356	25	75	4-Φ18	15	25	5	12	17	60	90	18	53	64	M10×18	88
8165/11	462	160	300	150	370	238	410	139	356	25	75	4-Φ18	18	35	6	14.5	20.5	60	90	18	53	64	M10×18	94
8175/09	478	200	340	275	380	335	430	125	425	30	80	4-Φ22	15	25	5	12	17	70	90	20	62.5	74.5	M12×24	120
8175/10	484	200	340	275	380	335	430	125	425	30	80	4-Φ22	15	25	5	12	17	70	90	20	62.5	74.5	M12×24	125
8175/11	509	200	340	275	380	335	430	125	425	30	80	4-Φ22	18	35	6	14.5	20.5	70	90	20	62.5	74.5	M12×24	130
8185/10	526	220	370	320	420	380	470	145	460	30	85	4-Φ22	15	25	5	12	17	80	110	22	71	85	M12×24	166
8185/13	577	220	370	320	420	380	470	145	460	30	85	4-Φ22	22	40	6	18.5	24.5	80	110	22	71	85	M12×24	185
8195/13	629	250	430	380	480	440	530	170	529	35	90	4-Φ26	18	35	6	14.5	20.5	95	135	25	86	100	M20×34	240
8195/16	653	250	430	380	480	440	530	170	529	35	90	4-Φ26	22	40	6	18.5	24.5	95	135	25	86	100	M20×34	250
8205/13	670	250	448	360	440	440	530	215	530	35	100	4-Φ26	18	35	6	14.5	20.5	100	165	28	90	106	M20×34	261
8205/16	705												22	40	6	18.5	24.5							275
8215/13	731	365	485	395	480	475	580	210	575	40	110	4-Φ26	22	40	6	18.5	24.5	110	165	28	100	116	M20×34	355
8215/16	780												30	45	8	26	33							375
8225/16	773	280	526	420	540	520	620	230	610	40	115	4-Φ33	22	40	6	18.5	24.5	120	165	32	109	127	M20×34	430
8225/17	860												35	55	10	30	38							475
8235/16	883	300	562	460	580	560	670	260	667	45	120	4-Φ33	30	45	8	26	33	130	200	32	119	137	M24×41	550
8235/18	938												40	65	12	35	43							583
8245/17	921	335	614	480	630	580	720	263	729	45	128	4-Φ39	30	45	8	26	33	140	200	36	128	148	M24×41	655
8245/18	975												40	65	12	35	43							688
8255/18	1081	375	670	520	670	630	780	320	815	50	140	4-Φ39	35	55	10	30	38	160	240	40	147	169	M30×49	1012
8255/19	1133												45	70	14	39.5	48.5							1087
8265/19	1243	400	736	590	770	700	880	390	874	55	160	4-Φ45	45	70	14	39.5	48.5	170	300	40	157	179	M30×49	1540
8275/19	1504	540	950	420×2	1050	1040	1160	485	1161	60	200	6-Φ45	45	70	14	39.5	48.5	180	330	45	165	190	M42×80	2740

Dimension chart for AXLE 8165/06～8145/10 double state vertical cycloidal speed reducer

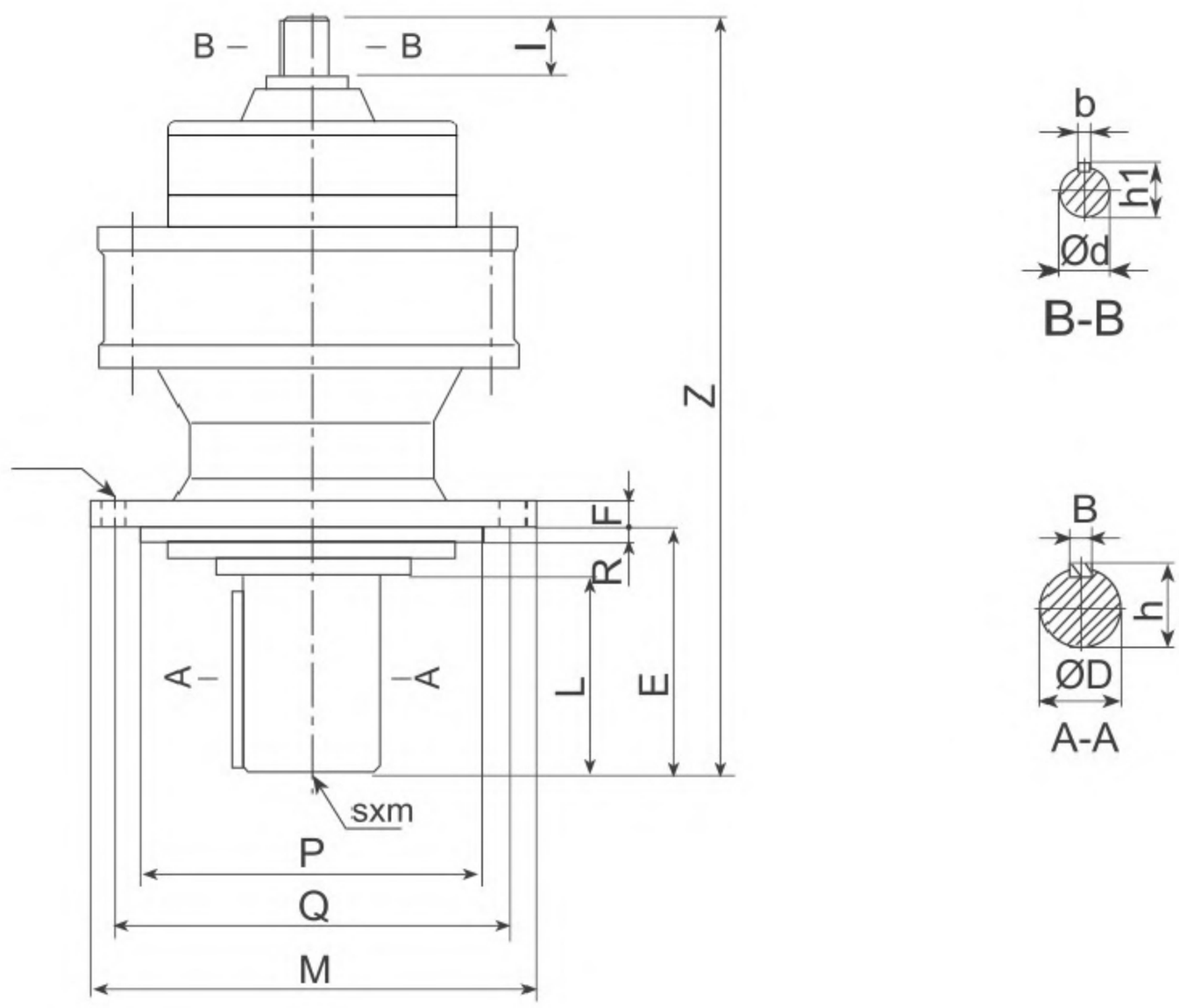

Type \ Size	Z	R	F	E	N-G	M	Q	P	Input Terminal					Output Terminal						Weight kg
									d	l	b	t1	h1	D	L	B	h	t	sxm	
8065/06	178	3	8	34	6-Φ9	120	102	80	12	25	4	9.5	13.5	14	25	5	16	11	–	4.3
8075/06	184	3	9	42	4-Φ11	160	134	110	12	25	4	9.5	13.5	18	30	6	20.5	14.5	–	4.3
8085/06	215	3	9	48	4-Φ9	160	134	110	12	25	4	9.5	13.5	22	35	6	18.5	25	–	5.2
8095/07	243	3	9	48	4-Φ11	160	134	110	12	25	4	9.5	13.5	28	35	8	31	24	–	13
8105/07	257	3	9	48	4-Φ11	160	134	110	12	25	4	9.5	13.5	28	35	8	31	24	–	16
8115/07	293	4	13	69	6-Φ11	210	180	140	12	25	4	9.5	13.5	38	55	10	41	33	–	25
8115/09	312								15	25	5	12	17							30
8135/07	347	4	15	76	6-Φ11	260	230	200	12	25	4	9.5	13.5	50	61	14	53.5	44.5	M10×18	42
8135/09	363	4	15	76	6-Φ11	260	230	200	15	25	5	12	17	50	61	14	53.5	44.5	M10×18	46
8135/10	369	4	15	76	6-Φ11	260	230	200	15	25	5	12	17	50	61	14	53.5	44.5	M10×18	51
8145/09	367	4	15	96	6-Φ11	260	230	200	12	25	4	9.5	13.5	50	81	14	53.5	44.5	M10×18	41
8145/10	383								15	25	5	12	17							46
8145/11	389								15	25	5	12	17							51

Dimension chart for AXLE 8165/09～8275/19 double state vertical cycloidal speed reducer

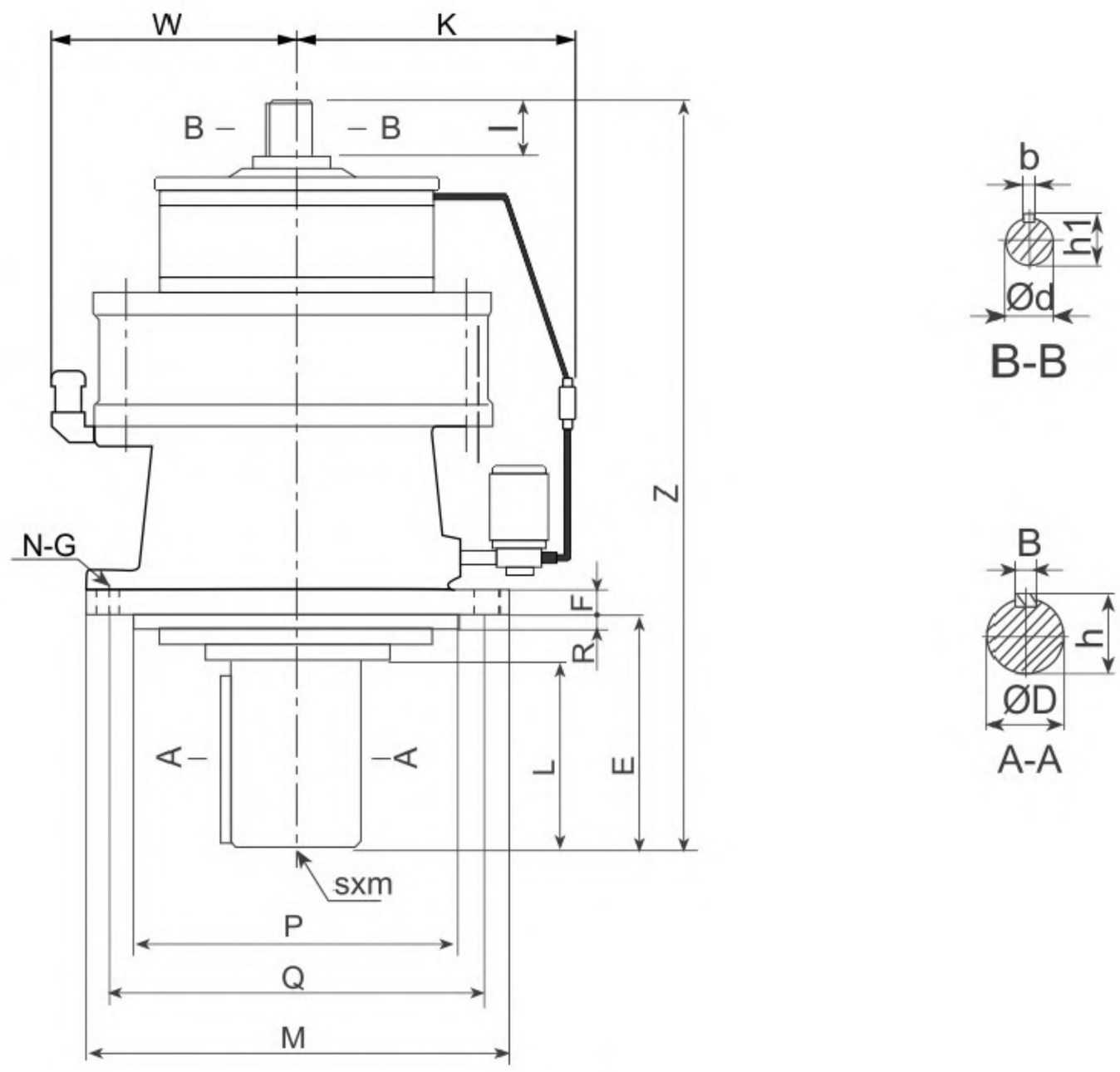

Type \ Size	Z	R	F	E	N-G	M	Q	P	K	W	Input Terminal					Output Terminal						Weight kg
											d	l	b	t1	h1	D	e	b	h	t	sxm	
8165/09	433	4	20	89	6-Φ11	340	310	270	217	200	15	25	5	12	17	60	80	18	64	53	M10×18	86
8165/10	439	4	20	89	6-Φ11	340	310	270	217	200	15	25	5	12	17	60	80	18	64	53	M10×18	88
8165/11	462	4	20	89	6-Φ11	340	310	270	217	200	18	35	6	14.5	20.5	60	80	18	64	53	M10×18	94
8175/09	478	5	22	94	8-Φ14	400	360	316	222	225	15	25	5	12	17	70	84	20	74.5	62.5	M12×24	120
8175/10	484	5	22	94	8-Φ14	400	360	316	222	225	15	25	5	12	17	70	84	20	74.5	62.5	M12×24	125
8175/11	509	5	22	94	8-Φ14	400	360	316	222	225	18	35	6	14.5	20.5	70	84	20	74.5	62.5	M12×24	130
8185/10	526	5	22	110	8-Φ18	430	390	345	237	240	15	25	5	12	17	80	100	22	85	71	M12×24	166
8185/13	577	5	22	110	8-Φ18	430	390	345	237	240	22	40	6	18.5	24.5	80	100	22	85	71	M12×24	185
8195/13	629	6	30	145	12-Φ18	490	450	400	360	200	18	35	6	14.5	20.5	95	125	25	100	86	M20×34	240
8195/16	653	6	30	145	12-Φ18	490	450	400	360	200	22	40	6	18.5	24.5	95	125	25	100	86	M20×34	250
8205/13	670	5	30	204	8-Φ22	455	405	355	376	287	18	35	6	14.5	20.5	100	165	28	106	90	M20×34	261
8205/16	705										22	40	6	18.5	24.5							275
8215/13	731	7	35	203	8-Φ24	490	440	390	400	290	22	40	6	18.5	24.5	110	165	28	116	100	M20×34	355
8215/16	780										30	45	8	26	33							375
8225/16	773	10	35	210	8-Φ27	535	475	415	400	326	22	40	6	18.5	24.5	120	165	32	127	109	M20×34	430
8225/17	860										35	55	10	30	38							475
8235/16	883	10	40	250	8-Φ27	570	510	450	413	344	30	45	8	26	33	130	200	32	137	119	M24×41	550
8235/18	938										40	65	12	35	43							583
8245/17	921	10	40	250	8-Φ33	635	560	485	420	365	30	45	8	26	33	140	200	36	148	128	M24×41	655
8245/18	975										40	65	12	35	43							688
8255/18	1081	10	45	295	8-Φ33	685	610	535	432	435	35	55	10	30	38	160	240	40	169	147	M30×49	1012
8255/19	1133										45	70	14	39.5	48.5							1087
8265/19	1243	10	50	360	8-Φ39	750	660	570	460	431	45	70	14	39.5	48.5	170	230	40	179	157	M30×49	
8275/19	1504	10	60	355	8-Φ39	1160	1020	900	610	613	45	70	14	39.5	48.5	180	320	45	190	165	M42×80	2740

MOTOLOGY

CYCLOIDAL SPEED REDUCER